ARMY TM 11-5815-602-10
NAVY EE161-DM-OPI-010/E154UGC74
AIR FORCE TO 31W4-2UGC74-1

OPERATOR'S MANUAL

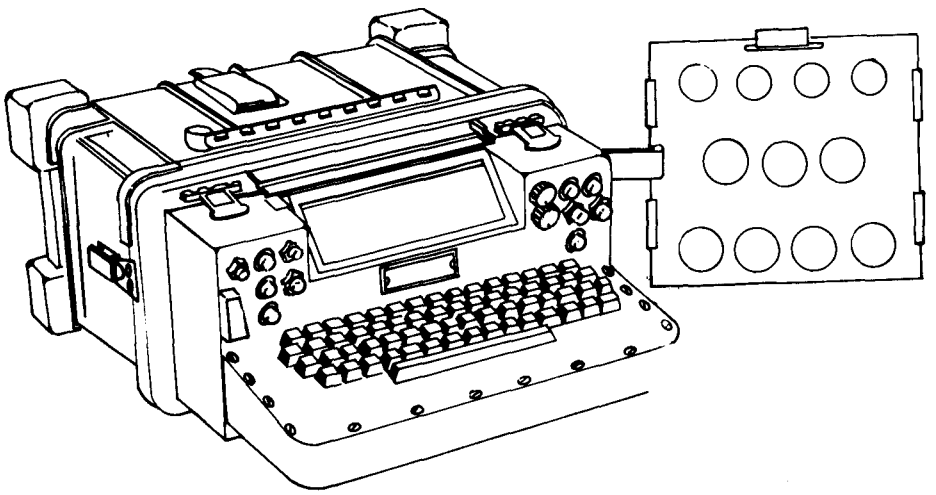

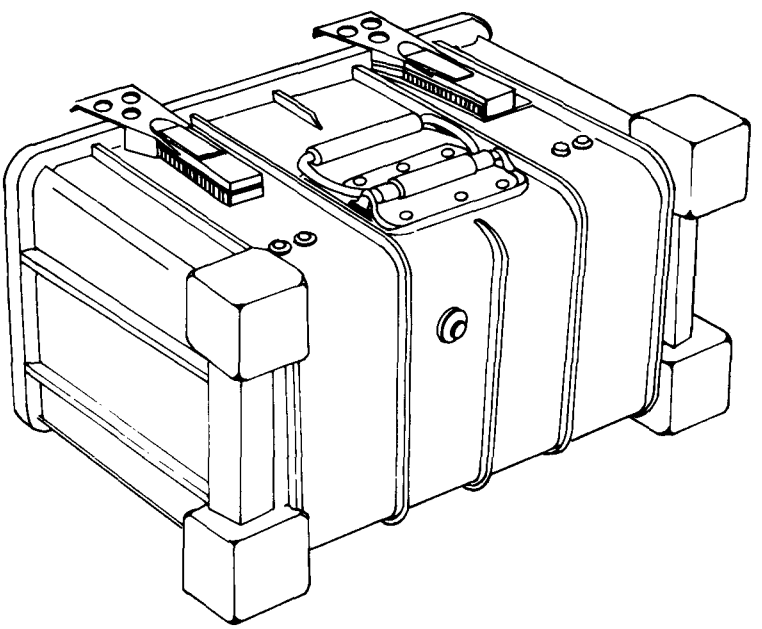

EQUIPMENT DESCRIPTION Page 1-5

OPERATING INSTRUCTIONS Page 2-0

DESCRIPTION OF CONTROLS Page 2-1

PREVENTIVE MAINTENANCE CHECKS AND SERVICES (PMCS) Page 2-39

OPERATOR MAINTENANCE INSTRUCTIONS Page 3-1

TROUBLESHOOTING Page 3-3

SUBJECT INDEX Page Index-1

TERMINAL, COMMUNICATIONS AN/UGC-74A(V)3
(NSN 5815-01-062-8194)

DEPARTMENTS OF THE ARMY, THE NAVY, AND THE AIR FORCE

23 SEPTEMBER 1983

WARNING

HIGH VOLTAGE

is used in the operation of this equipment

DEATH ON CONTACT

may result if personnel fail to observe safety precautions

Never work on electronic equipment unless there is another person nearby who is familiar with the operation and hazards of the equipment and who is competent in administering first aid. When the technician is aided by operators, he must warn them about dangerous areas.

Whenever possible, the power supply to the equipment must be shut off before beginning work on the equipment. Take particular care to ground every capacitor likely to hold a dangerous potential. When working inside the equipment, after the power has been turned off, always ground every part before touching it.

Be careful not to contact high voltage input connections of 115/230 volt ac when installing or operating this equipment.

Whenever the nature of the operation permits, keep one hand away from the equipment to reduce the hazard of current flowing through vital organs of the body.

WARNING

Do not be misled by the term “low voltage”. Potentials as low as 50 volts may cause death under adverse conditions.

For Artificial Respiration, refer to FM 21-11.

WARNING

Adequate ventilation should be provided while using TRICHLOROTRIFLUOROETHANE. Prolonged breathing of vapor should be avoided. The solvent should not be used near heat or open flame; the products of decomposition are toxic and irritating. Since TRICHLOROTRIFLUOROETHANE dissolves natural oils, prolonged contact with skin should be avoided. When necessary use gloves which the solvent cannot penetrate. If the solvent is taken internally, consult a physician immediately.

WARNING

Lithium organic batteries or cells are used in this equipment. They are potentially hazardous if misused or tampered with before, during, or after discharge. The following precautions must be strictly observed to prevent possible injury to personnel or equipment damage:

DO NOT heat, incinerate, crush, puncture, disassemble, or otherwise mutilate the batteries.

DO NOT short circuit, recharge, or bypass internal fuse.

DO NOT store in equipment during long period of nonuse in excess of 30 days.

TURN OFF the equipment immediately if you detect battery compartment becoming unduly hot, hear battery cells venting (hissing sound), or smell irritating sulphur dioxide gas. Remove and dispose of the battery only after it is cool (30-60 minutes).

5 SAFETY STEPS TO FOLLOW IF SOMEONE IS THE VICTIM OF ELECTRICAL SHOCK

1. DO NOT TRY TO PULL OR GRAB THE INDIVIDUAL
2. IF POSSIBLE , TURN OFF THE ELECTRICAL POWER
3. IF YOU CANNOT TURN OFF THE ELECTRICAL POWER, PULL, PUSH, OR LIFT THE PERSON TO SAFETY USING A WOODEN POLE OR A ROPE OR SOME OTHER INSULATING MATERIAL
4. SEND FOR HELP AS SOON AS POSSIBLE
5. AFTER THE INJURED PERSON IS FREE OF CONTACT WITH THE SOURCE OF ELECTRICAL SHOCK, MOVE THE PERSON A SHORT DISTANCE AWAY AND IMMEDIATELY START ARTIFICIAL RESUSCITATION

TECHNICAL MANUAL
No. 11-5815-602-10
No. EE161-DM-OPI-010/E154UGC74
TECHNICAL ORDER
No. 31W4-2UGC74-1

DEPARTMENTS OF THE ARMY, THE NAVY,

AND THE AIR FORCE

WASHINGTON, DC, 23 September 1983

OPERATOR'S MANUAL
TERMINAL, COMMUNICATIONS AN/UGC-74A(V)3
(NSN 5815-01-062-8194)

REPORTING OF ERRORS AND RECOMMENDING IMPROVEMENTS

You can help improve this manual. If you find any mistakes or if you know of a way to improve the procedures, please let us know. Mail your letter, DA Form 2028 (Recommended Changes to Publications and Blank Forms), or DA Form 2028-2 located in back of this manual direct to: Commander, US Army Communications-Electronics Command and Fort Monmouth, ATTN: DRSEL-ME-MP, Fort Monmouth, New Jersey 07703.

For Air Force, submit AFTO Form 22 (Technical Order System Publication Improvement Report and Reply) in accordance with paragraph 6-5, Section VI, T.O. 00-5-1. Forward direct to prime ALC/MST.

For Navy, mail comments to the Commander, Naval Electronics Systems Command, ATTN: ELEX 8122, Washington, DC 20360.

In either case, a reply will be furnished direct to you.

TABLE OF CONTENTS

			PAGE
		HOW TO USE THIS MANUAL	iii
CHAPTER 1		INTRODUCTION	1-0
Section	I	General	1-1
	II	Equipment Description	1-5
CHAPTER 2		OPERATING INSTRUCTIONS	2-0
Section	I	Description and Use of Operator's Controls and Indicators	2-1
	II	Preventive Maintenance Checks and Services	2-39
	III	Operation Under Usual Conditions	2-44
	IV	Operation Under Unusual Conditions	2-86
CHAPTER 3		OPERATOR MAINTENANCE INSTRUCTIONS	3-1
Section	I	Troubleshooting Procedures	3-1
	II	Operator Maintenance Procedures	3-6
APPENDIX A		REFERENCES	A-1
	B	COMPONENTS OF END ITEM LIST	B-1

***This manual supersedes the operator's portion of TM 11-5815-602-12, 30 November 1979, including all changes.**

TABLE OF CONTENTS - Continued

APPENDIX		PAGE
C	ADDITIONAL AUTHORIZATION LIST ITEMS	C-1
D	EXPENDABLE SUPPLIES AND MATERIALS LIST	D-1
E	AMERICAN NATIONAL STANDARD CODE FOR INFORMATION INTERCHANGE (ASCII) AND KEYBOARD TABLES	E-1
F	OPERATOR EXAMPLES - SYSTEM COMMANDS	F-1
G	OPERATOR EXAMPLES - PARAMETER SUBCOMMANDS	G-1
H	OPERATOR EXAMPLES - EDIT SUBCOMMANDS	H-1
I	SUMMARY LISTS OF OPERATOR ACTIONS AND TERMINAL RESPONSES	I-1
J	REFERENCE TABLES	J-1
	Table J-1. System Abbreviations	J-1
	Table J-2. Error Message List	J-2
	Table J-3. Shortest Acceptable Forms for System Commands and Subcommands	J-3
SUBJECT INDEX		I-1

HOW TO USE THIS MANUAL

This manual tells you how to operate and perform operator maintenance on the Communications Terminal AN/UGC-74A(V)3.

Location of Subjects in Manual

In this manual, paragraphs and pages are numbered in succession by chapter. For example: Paragraph 2-14 is paragraph 14 in Chapter 2. Page 3-5 is page 5 in Chapter 3.

If you are looking for specific information use subject INDEX in the back of this manual to locate page number where the topic is described.

For rapid location of a required subject, contents of chapter are listed alphabetically on the first page of each chapter.

Refer to Appendix A, REFERENCES, for the complete title of all forms, technical manuals and military specifications referenced in this manual.

Refer to LIST OF ABBREVIATIONS and GLOSSARY in Chapter 1 for a definition of the abbreviations and unusual terms used in this manual.

Use of Manual for Task Performance

You must become thoroughly familiar with all the operating controls, switches, lamps and keys before you can properly use and maintain the terminal. Chapter 2 describes the use of operator controls, while Chapter 3 tells you how to maintain the equipment.

As a further aid to knowing operating procedures, Appendixes E through J, located in the back of the manual, provide information and detailed examples of operator action and terminal response in the operational states.

Use this manual in conjunction with your station's Standard Operating Procedure (SOP) when formatting messages. Appendix H provides an example of a JANAP 128(H) PLAIN DRESS header and message.

You must familiarize yourself with all the maintenance procedures before beginning the maintenance task.

Do not perform maintenance tasks that are assigned to a maintenance level higher than you are authorized to perform. Call your supervisor or next higher level of maintenance if you have a problem not described in this manual.

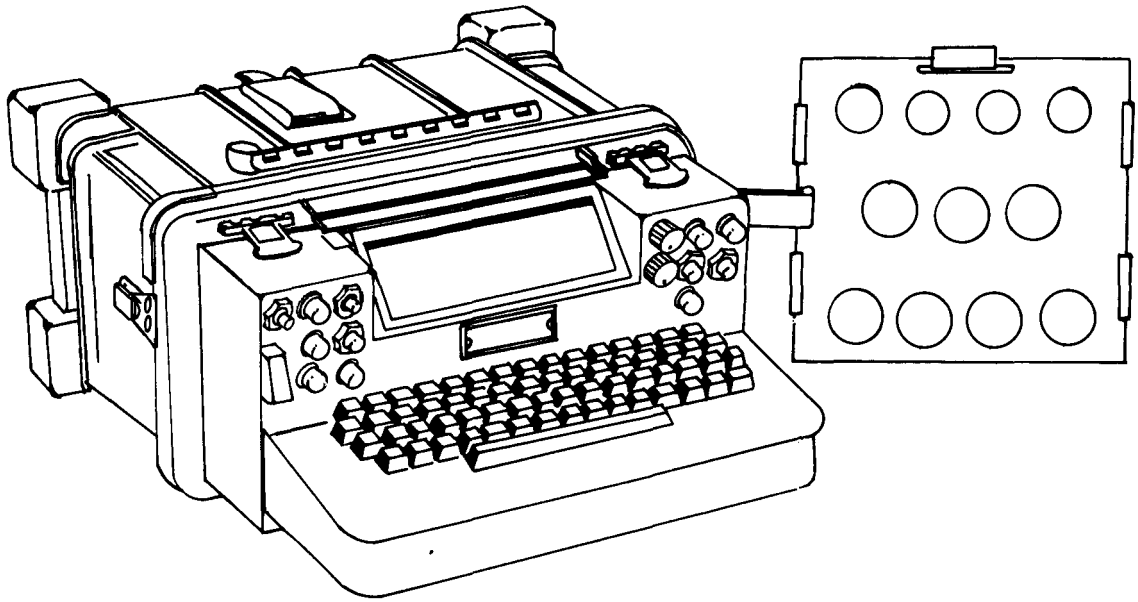

Figure 1-1.

TERMINAL, COMMUNICATIONS AN/UGC-74A(V)3 WITH COPYHOLDER ATTACHED

CHAPTER 1

INTRODUCTION

PAGE

Abbreviations List 1-2
Characteristics, Capabilities, and Features of the Terminal 1-5
Equipment Data 1-7
Glossary of Terms 1-3
Hand Receipt Manual 1-1
Maintenance Forms, Records, and Reports 1-1
Nomenclature Cross Reference List 1-1
Reporting Equipment improvement Recommendations(EIR) 1-1
Scope 1-1

Section I. GENERAL

1-1. SCOPE

This manual is a guide for installation and operation of Terminal, Communications AN/UGC-74A(V)3 (fig. 1-1).

1-2. MAINTENANCE FORMS, RECORDS, AND REPORTS

a. Reports of Maintenance and Unsatisfactory Equipment. Department of the Army forms and procedures used for equipment maintenance will be those prescribed by TM 38-750, The Army Maintenance Management System (TAMMS). Air Force personnel will use AFR 66-1 for maintenance reporting and TO-00-35D54 for unsatisfactory equipment reporting. Navy personnel will report maintenance performed utilizing the Maintenance Data Collection Subsystem (MDCS) IAW OPNAVINST 4790.2, Vol 3 and unsatisfactory material/conditions (UR submissions) IAW OPNAVINST 4790.2, Vol 2, chapter 17.

b. Report of Packaging and Handling Deficiencies. Fill out and forward SF 364 (Report of Discrepancy (ROD)) as prescribed in AR 735-11-2/DLAR 4140.55/NAVMATINST 4355.73A/AFR 400-54/MCO 4430.3F.

c. Discrepancy in Shipment Report (DISREP) (SF 361). Fill out and forward Discrepancy in Shipment Report (DISREP) (SF 361) as prescribed in AR 55-38/NAVSUPINST 4610.33C/AFR 75-18/MCO P4610.19D/DLAR 4500.15.

1-3. HAND RECEIPT (-HR) MANUAL

This manual has a companion document with a TM number followed by "-HR" (which stands for Hand Receipt). TM 11-5815-602-10-HR consists of preprinted hand receipts (DA Form 2062) that list end item related equipment (i.e., COEI, Bll, AND AAL) you must account for. As an aid to property accountability, additional -HR manuals may be requisitioned from The US Army Adjutant General Publications Center, Baltimore, MD, in accordance with the procedures In Chapter 3, AR 310-2, and DA PAM 310-10-2.

1-4. REPORTING EQUIPMENT IMPROVEMENT RECOMMENDATIONS (EIR)

a. *Army.* If your Terminal, Communications AN/UGC-74A(V)3 needs improvements, let us know. Send us an EIR. You, the user, are the only one who can tell us what you don't like about your equipment. Let us know why you don't like the design. Put it on an SF 368 (Quality Deficiency Report). Mail it to Commander, US Army Communication- Electronics Command and Fort Monmouth, ATTN: DRSEL-ME-MP, Fort Monmouth, New Jersey 07703. We'll send you a reply.

b. *Air Force.* Air Force personnel are encouraged to submit EIR's in accordance with AFR 900-4.

c. *Navy.* Navy personnel are encouraged to submit EIR's through their local Beneficial Suggestion Program.

1-5. NOMENCLATURE CROSS-REFERENCE LIST

Common names will be used when the major components of the terminal are mentioned in this manual.

Common Name	Nomenclature
Terminal	Terminal, Communications AN/UGC-74A(V)3
Printer Assembly	Teleprinter Assembly (K3A1)
Memory Circuit Card	Circuit Card Assembly, Memory (3A1A2)
Communications Circuit Card	Circuit Card Assembly, Communications (3A1A3)
Print Control Circuit Card	Circuit Card Assembly, Printer Control (3A1A4)
Chassis	Chassis Assembly (3A1A6)

Filter	Filter Assembly (3A1A6FL1)
Interface	Interface Assembly (3A1A7)
Power Supply	Circuit Card Assembly, Power Supply (3A1PS1)
Keyboard	Assembly, Keyboard
Battery Backup Cable	Assembly, Cable, Battery Backup SM-D-915890
Power Cable	Assembly, Cable, Power, dc, SM-D-764480
Power Cable	Assembly, Cable, Power, 115 Vac, SM-D-764481
Power Cable	Assembly, Cable, Power, 230 Vac, SM-D-764482
Hi-Level Cable	Assembly, Cable, Hi-Level, XMIT/RCV, SM-D-915889
Low-Level Cable	Assembly, Cable, Low-Level, XMIT/RCV, SM-D-915896
Low-Level Clock Cable	Assembly, Cable, Low-Level, Clock, XMIT/RCV, SM-D-915897

NOTE

Official nomenclature must be used when filling out report forms or when referring to technical manuals.

1-6. LIST OF ABBREVIATIONS

Abbreviations are spelled out the first time they appear in this manual. A complete list of abbreviations used in this manual is given below.

ASCII	American Standard Code for Information Interchange
BAT	Battery
BEL	Bell Code
BRT	Bright
BS	Backspace
CPU	Central Processing Unit
CR	Carriage Return
CTL	Control
DEL	Delete
DLC	Delete Last Character
DLL	Delete Last Line
EMI	Electro Magnetic Induction
ETM	Elasped Time Meters
HL T	Halt
ICT	Intelligent Communications Terminal
INT/EXT	Internal/External
KSR	Keyboard Send/Receive
LF	Line-Feed
LOC	Lock
MAX	Maximum
MSG RCVD	Message Received
MWO	Modification Work Orders
NRZ	Non-Return to Zero
REC	Record
REV	Review
RFI	Radio Frequency Interference
RO	Receive Only
SOP	Standard Operating Procedure
XMIT	Transmit

1-7. GLOSSARY

ASCII . . . . . An abbreviation for, American Standard Code for Information interchange. A seven-bit plus parity code developed by the American Standards Association. (Refer to Appendix E for complete description of ASCII).

Baud Code FIG-LTRS . . . . . A 5-level code used for telegraph keyboard printers, punches and readers. Five bits can accept only 32 special codes, of which two are figures (FIGS) and letters (LTRS). Placing the FIGS or LTRS code before other bit combinations permits dual definition of the remaining codes. So when a Baudot terminal is interfaced to a computer, the software must maintain proper FIGS-LTRS status in order to interpret the necessary data properly.

Baud Rate . . . . . In data communications, a fixed amount of time is devoted to sending a pulse, known as a binary digit or “bit”.A bit can be either a positive pulse, as a telegraph dot, or a blank, as a telegraph pause. The number of bits that can be transmitted in one second is the baud rate.

Buffer . . . . . A storage device used to compensate for difference in the rate of flow of information or the time of occurence of events.

Delimiter . . . . . Any ASCII character used as a space or separator. It cannot appear in the same string for which it is a delimiter.

Envelope . . . . . A group of binary digits, including data and call control signals, which is transmitted or received as a complete unit. The data, all control signals, and possibly error control information, are arranged in a specific format.

Hexadecimal Code . . . . . Two digits (2 numbers or a number and a letter) representing the ASCII code for a character. (See Appendix G, table G-1, “HEX-ASCII” Conversion.) Hexadecimal digits are used in the End-of-line subcommand in a sequence in place of a carriage-return, and in the Tenvelope and Renvelope subcommands start and stop sequences. System abbreviation for hexadecimal digits is HH.

Interface . . . . . A method used to interconnect two equipments or systems. The method includes the type, quality and function of the interconnecting circuits and the type and form of signals to be interchanged through these circuits.

GLOSSARY-Continued

Justify . . . . . To space a typewritten line so that it is exactly the intended length.

Line Pointer . . . . . Position within the message file always points to the first character of the current line.

Mnemonic (Ni-mon'-ik) . . To remember, helping, or meant to help the memory.

Non-Return Zero (NRZ) . . . A mode of recording in which each state of the medium corresponds to one binary state. In this mode, the state of the recording medium changes when the information changes from 1 to 0 or from 0 to 1.

NOTE

"NRZ modified" is also often called "NRZ".

Parity Bit . . . . . A binary digit attached to an array of bits to make the sum of all the bits either always odd or always even.

Parity Check . . . . . Addition of non-information bits to data, making the number of ones in a grouping of bits either always even or always odd. This permits detection of bit groupings which contain single errors. It may be applied to characters, blocks, or any convenient bit grouping.

Renvelope . . . . . Allows the operator to set the envelope which is put around a message for reception by the system. This sequence never appears in the message storage and is used for communications purposes only.

Tenvelope . . . . . Allows the operator to set the envelope which is put around a message for transmission by the system. This sequence never appears in the message storage and is used for communications purposes only.

Section II. EQUIPMENT DESCRIPTION

1-8. CHARACTERISTICS, CAPABILITIES AND FEATURES OF THE TERMINAL

CHARACTERISTICS

- Composes, edits, transmits, receives, prints, and stores messages.
- Operates in half or full-duplex conditions.
- Utilizes both ASCII and Baudot character codes.
- Uses signaling speeds of 45.5, 50, 75, 150, 300, 600, and 1200 bauds using an internal clock.
- Other rates are available provided an external clock is used.
- Operates as an intelligent communications terminal, a keyboard send/receive terminal, or a receive-only terminal.

CAPABILITIES AND FEATURES

Housed in a ruggedized combination case for use in the following tactical field equipment:

- Moving vehicles.
- Aircraft.
- Field shelters.
- Secure (crypto) locations where protection against electromagnetic interference is required.

LOCATION OF MAJOR COMPONENTS

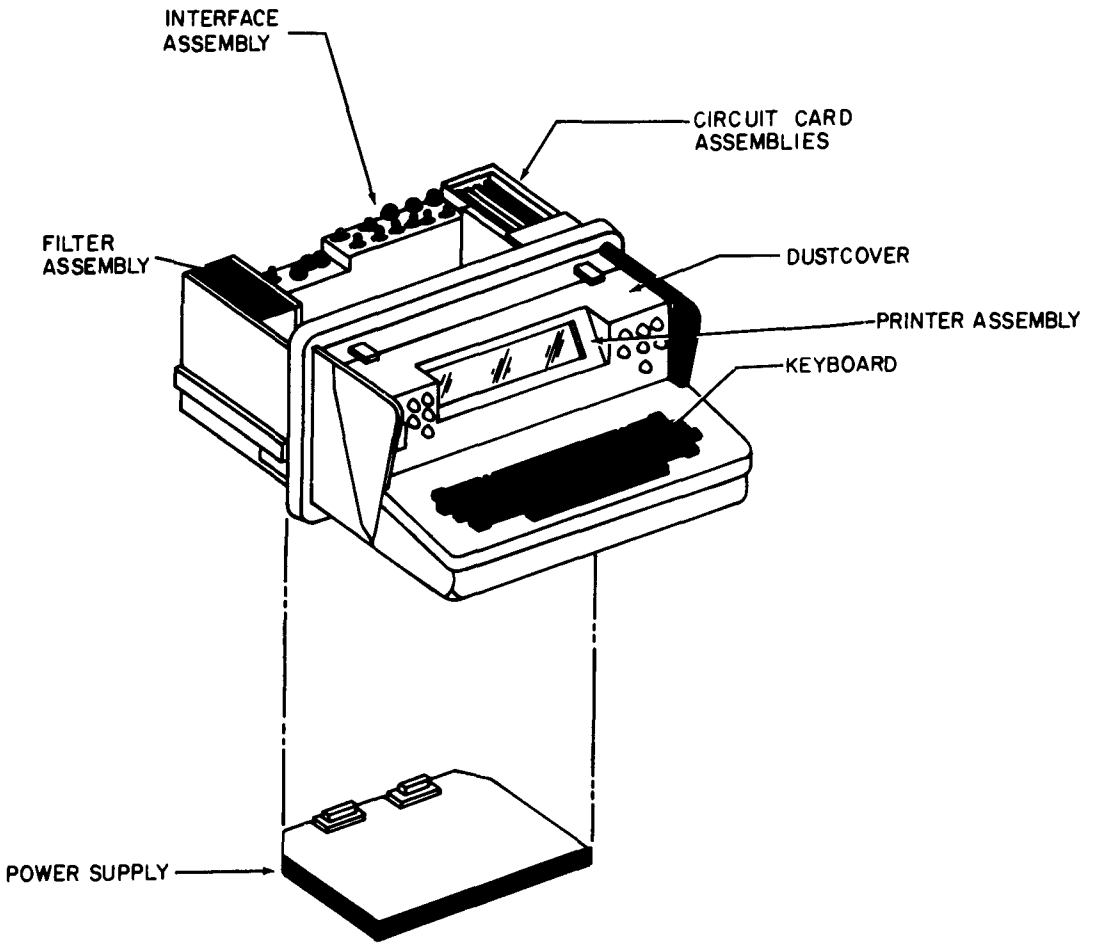

Figure 1-2. MAJOR COMPONENTS OF TERMINAL

1-9. EQUIPMENT DATA

The technical characteristics and equipment data are as follows:

Operating Speeds

Baud Rate	Code
1200	ASCII 10 unit (1 stop bit) ASCII 11 unit (2 stop bits)
600	ASCII 10 unit (1 stop bit) ASCII 11 unit (2 stop bits)
300	ASCII 10 unit (1 stop bit) ASCII 11 unit (2 stop bits)
150	ASCII 10 unit (1 stop bit) ASCII 11 unit (2 stop bits)
75	ASCII 10 unit (1 stop bit) ASCII 11 unit (2 stop bits) Baudot 7 unit (1 stop bit) Baudot 8 unit (2 stop bits)
50	Baudot 7 unit (1 stop bit) Baudot 8 unit (2 stop bits)
45.5	Baudot 7 unit (1 stop bit) Baudot 8 unit (2 stop bits)

System Application

a. Full-Duplex.
- Send and receive at the same time.

b. Half-Duplex.
- Receive-only. Uses only the terminal's receive capabilities.
- When operating in this state, the terminal does not use the keyboard. Message reception and printing are performed automatically.

System Interface

a. Operates with the following COMSEC devices:
- VINSON (TSEC/KEY-57)
- KG-30 (TSEC/KEY-30)
- DLED (TSEC/KY-84)
- KW-7 (TSEC/KW-7)

b. Also operates with the following equipment:
- TH-22/TG
- MD-522/GRC

Keyboard

. Standard keyboard Arrangement plus 4 editing keys

Printer

a. Type and Print Rate:
- Drum
- c 60 characters per second, minimum

b. Printed Characters Per Line:
- Operator selectable from 40 to 80 characters
- Line length is set at 80 characters in the POWER ON condition

Paper Type and Capacity
- Single or multiply (3 ply maximum) roll paper
- 5 X 8½ inches

Other Printer Features
- Single or double line-feed
- Paper-low lamp
- Automatic shutdown of printing when paper runs out
- Print drum motor shuts down if no printing occurs between 2 to 4 minutes

Power Requirement
- 100 watts, maximum

Operating Voltages
- 26 (±4) volts dc
- 115 volts ac (±15%), 50, 60, or 400 Hz (±5%)
- 230 volts ac (±15%), 50, 60, or 400 Hz (±5%)

Environmental Conditions

a. Operating Temperature:
- -25 F to +125 F (-32 C to +52 C)
- Plus solar radiation

b. Non-Operating Temperature:
- -65 F to +155 F (-54 C to +68 C)

c. Case Closed:
- Water and dust proof

d. Case Cover Removed:
- Spray proof

Physical Characteristics

a. Total Weight:
- 100 Ibs. with case, cover and paper

b. Dimensions:
- 21.75 inches long
- 17.5 inches wide
- 9.5 inches high

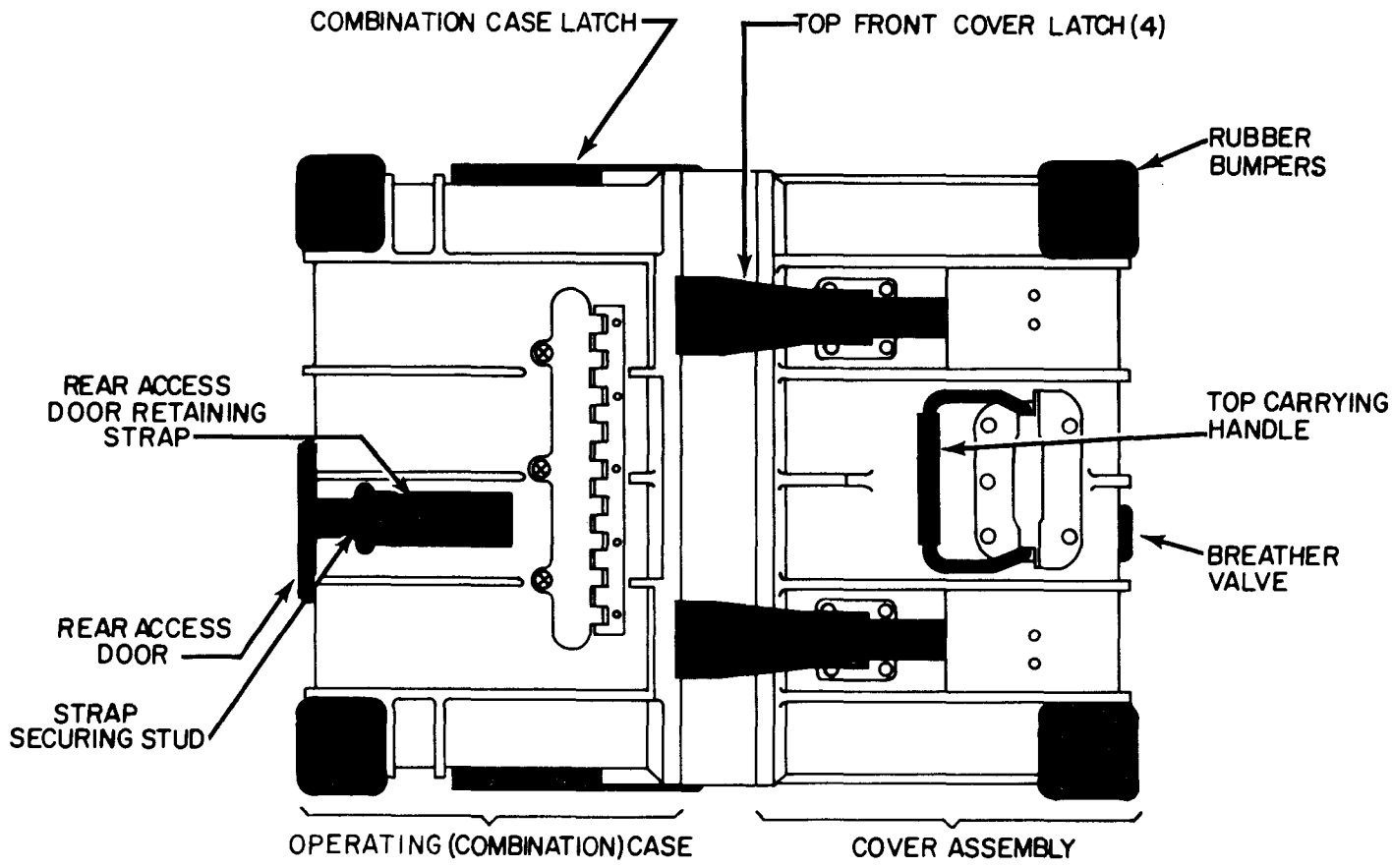

Figure 1-3. TOP VIEW OF TERMINAL

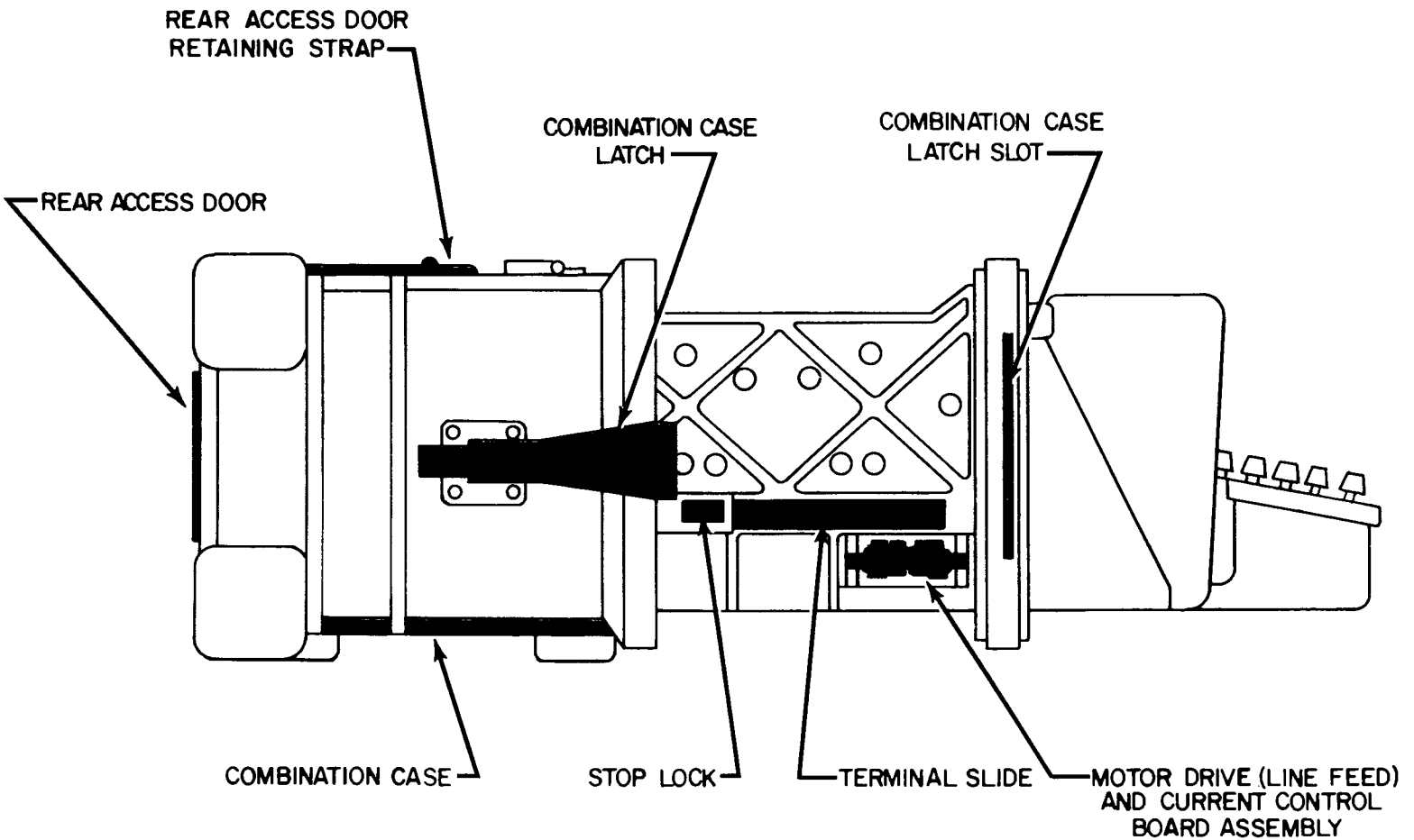

Figure 1-4. SIDE VIEW OF TERMINAL, FULLY EXTENDED

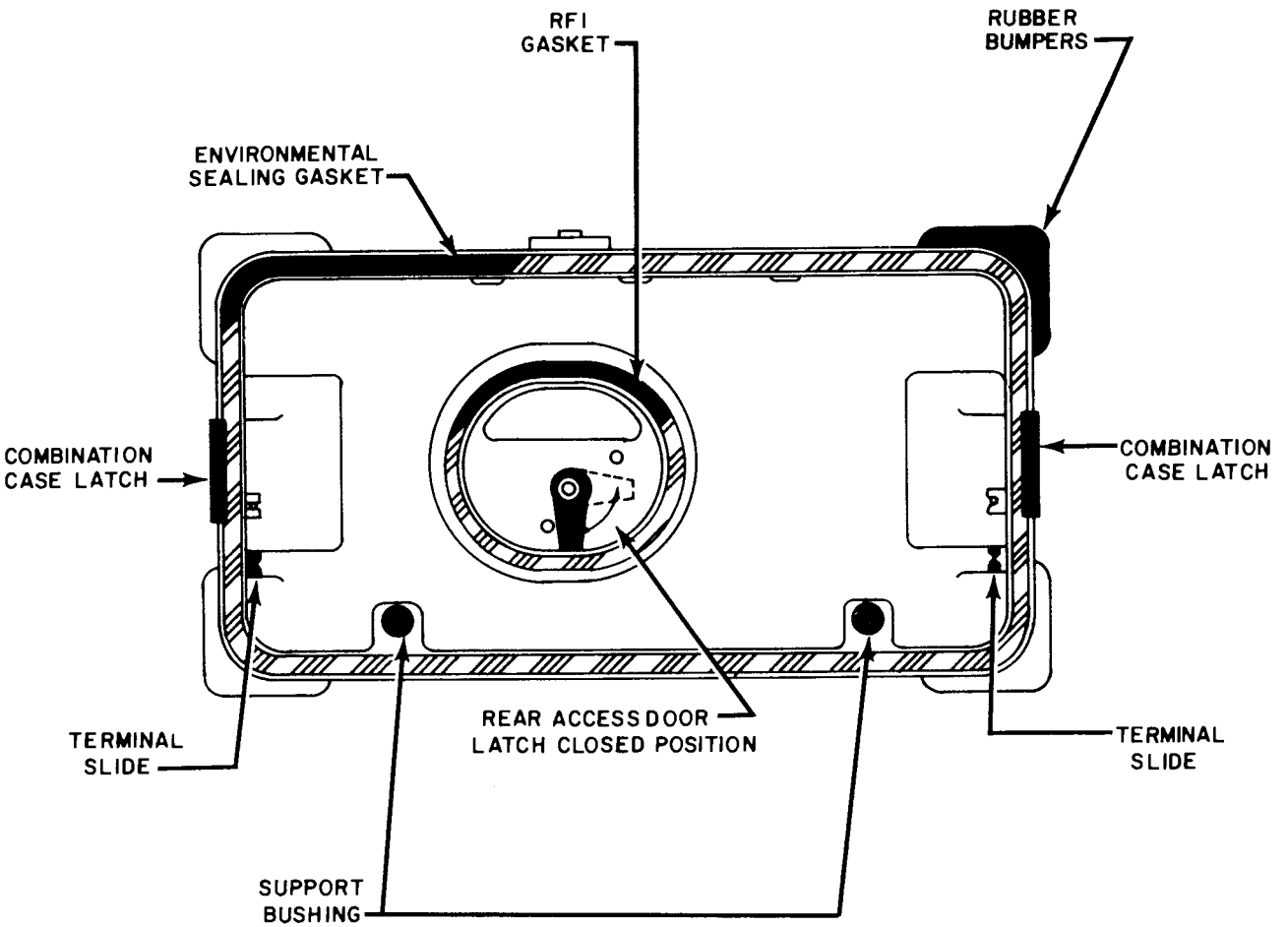

Figure 1-5. REAR VIEW OF TERMINAL

CHAPTER 2

OPERATING INSTRUCTIONS

PAGE

Basic Command Errors. 2-62
Dustcover Controls and Indicators 2-1
Error Message List 2-61
ICT State Operating Instructions 2-59
Inputting Commands 2-62
Internal Controls and Switches 2-11
Keyboard Keys 2-20
Message Memory. 2-69
Message Numbering 2-65
Operational States and Nonoperational Conditions 2-28
Operating Procedures 2-47
Receive Only (RO). 2-52
KeyboardSend/Receive(KSR).. 2-54
Intelligent CommunicationsTerminal (ICT) 2-56
Operational Tests with Distant Station 2-84
Operation Under EmergencyConditions 2-88
Operation Under Unusual Conditions 2-86
Preemption of Operator. 2-70
PreliminaryStarting Procedures 2-44
Preparation for Movement. 2-90
Prompt Sequence Indicators. 2-63
Preventive Maintenance Checks and Services (PMCS) 2-39
Receive Message Process 2-67
Self-Test Condition. 2-33
System Abbreviations Table. 2-59
System Commands. 2-71
Parameter 2-74
Edit 2-76
Print 2-78
Transmit 2-79
Remove 2-80
Justify 2-81
Query 2-82
Status 2-82
TTY 2-83
Transmit Message Process 2-67

Section I. DESCRIPTION AND USE OF OPERATOR'S CONTROLS AND INDICATORS AN/UGC-74A(V)3

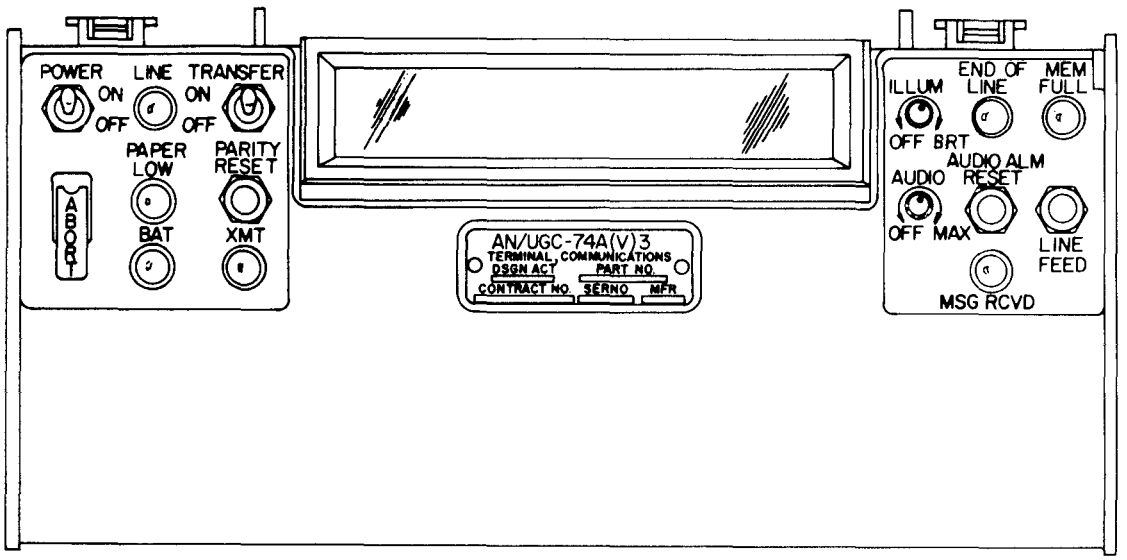

Figure 2-1. DUSTCOVER CONTROLS AND INDICATORS

2-1. DUSTCOVER CONTROLS AND INDICATORS

a. These controls and indicators are used in all operating states.
b. Available to the operator in Receive Only (RO) state.

POWER Switch-On

POWER ON

- Inputs primary power into terminal.
- Starts print drum rotating.
- Causes all indicator lamps to flash momentarily.
- Audio alarm sounds momentarily.
- Operation validation/state determination message prints out.

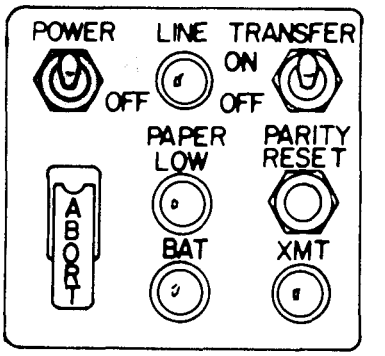

POWER OFF

POWER Switch-Off

a. Shuts off flow of primary and battery backup power into terminal.
b. When terminal is powered down the following occurs:
   - Print drum stops rotating.
   - Copy and indicator lamps turn off.
   - All data stored in memory is erased.

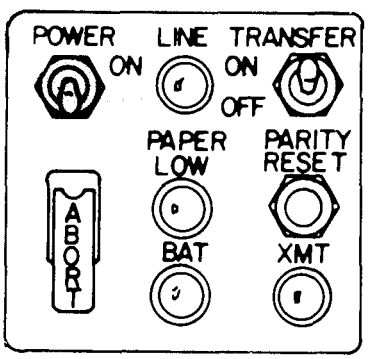

LINE Lamp

LINE Lamp

- On when data is being received.
- Lamp remains on for duration of message reception.
- Lamp lights to indicate an interface problem has occurred.
- Off when line is in a steady marking condition.

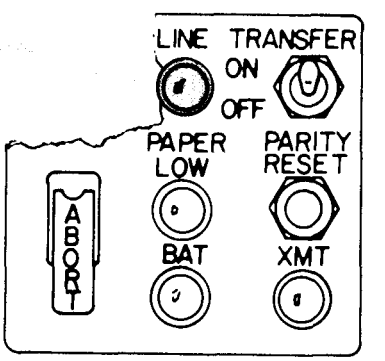

TRANSFER Switch-ON

NOTE

Terminal must be connected to an auxiliary transmitter for the TRANSFER switch to operate.

Closes circuit which performs the following functions:

- Provides a method for keying a radio transmitter by pushing the TALK switch of the transmitter.
- Causes a communications security device (COMSEC) to enter data mode.

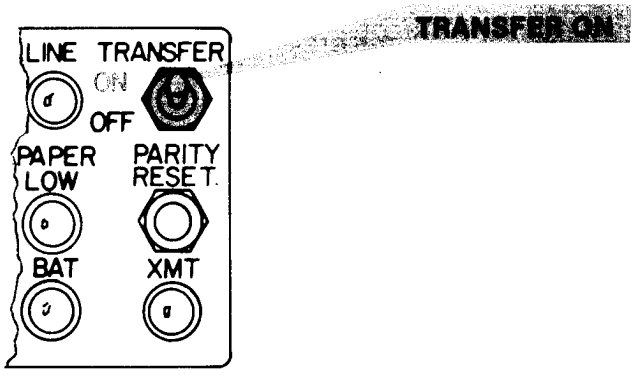

TRANSFER Switch-OFF

- Opens circuit to the auxiliary transmitter.

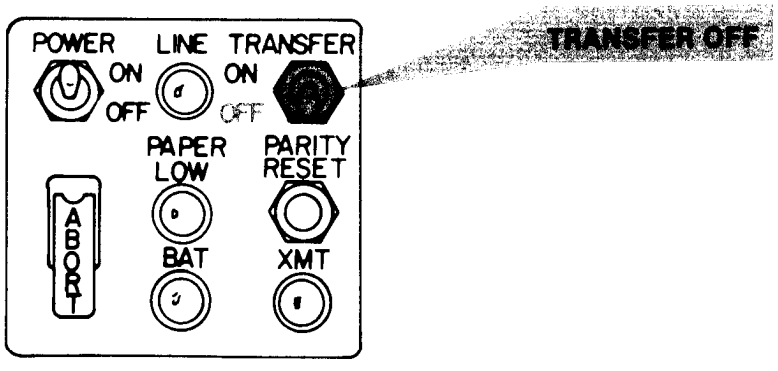

ABORT Switch

- Spring loaded.
- Guarded by metal shield to prevent accidental activation.
- Halts operation currently in progress (transmitting, receiving, or printing).
- Returns control to the operator.

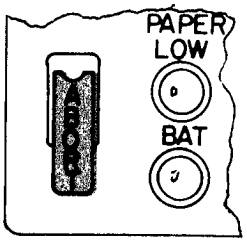

NOTE

Abort switch will not halt self-test condition.

PAPER LOW Lamp

- Indicates roll paper supply is nearly depleted.
- Print drum stops when paper supply is completely depleted.

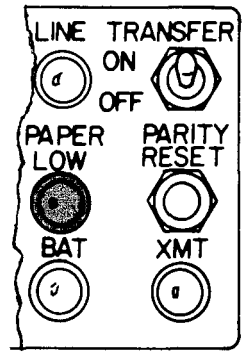

PARITY RESET Switch

Momentarily held in:

- Resets parity alarm and turns off PARITY lamp (inside the switch).
- Performs lamp test on all dustcover indicator lamps.

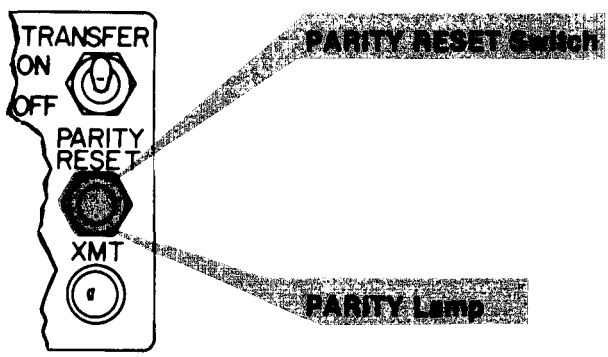

PARITY Lamp

- Operates only in ASCII mode. (Refer to Appendix E for detailed explanation of ASCII mode.)
- Lights when a character with a parity error is received and parity is not inhibited.
- A diamond symbol ( ) will be printed in place of the character containing the parity error.

NOTE

The lamp will remain on until the operator momentarily presses the PARITY RESET Switch.

BAT Lamp

- Lights when primary power source fails and system changes to battery backup condition.
- Lamp remains on until primary power is restored.

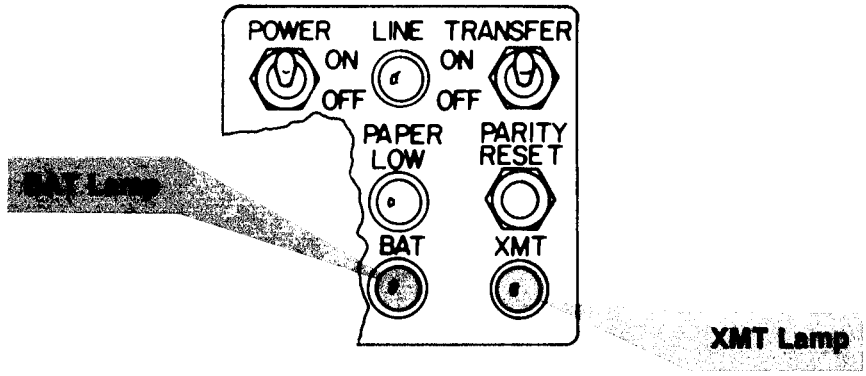

XMT (Transmit) Lamp

- Lights and remains on during transmission.
- Automatically turns off at completion of transmission.

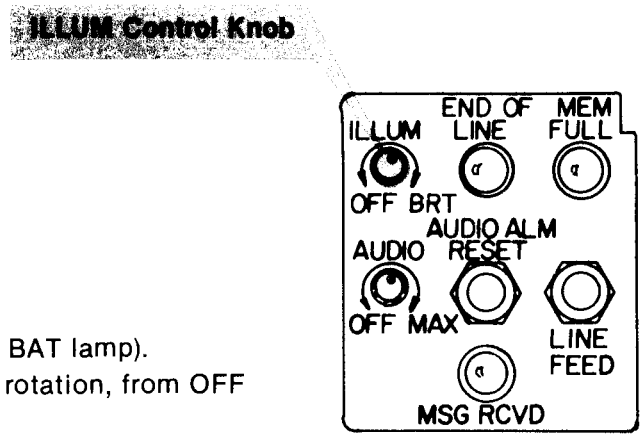

ILLUM (illumination) Control Knob

- Adjusts brightness of all lamps (except BAT lamp).
- Illumination is adjusted by a clockwise rotation, from OFF to BRT (bright).

END-OF-LINE Lamp

- Lamp lights on the sixth print position from the end of the line.
- Lamp remains on until a carriage return or 81st character is entered from the keyboard.
- Print position moves to left margin.
- Carriage return turns lamp off.

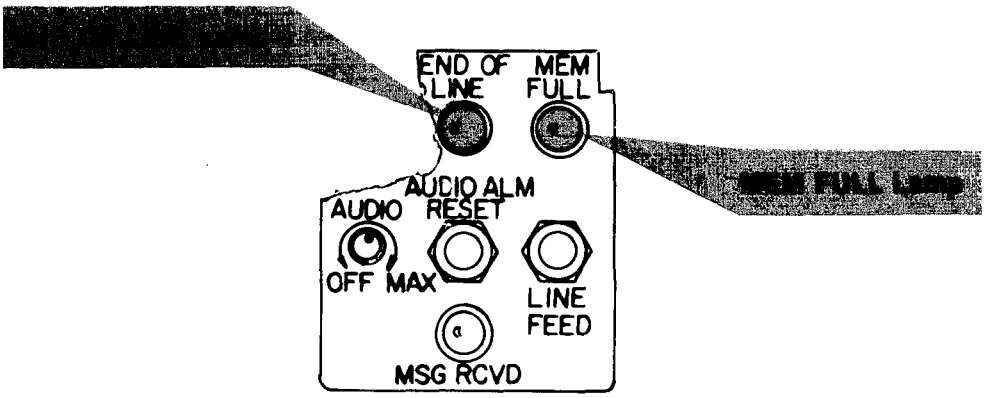

MEM FULL (Memory Full) Lamp

- Lights when 25% of message space remains in memory board for incoming message storage.
- Lamp remains on until enough stored messages are removed.
- Lamp turns off.

AUDIO Control Knob

- Adjusts the volume of the audible alarm tone.
- Volume is adjusted by a clockwise rotation, from OFF to MAX (maximum volume).

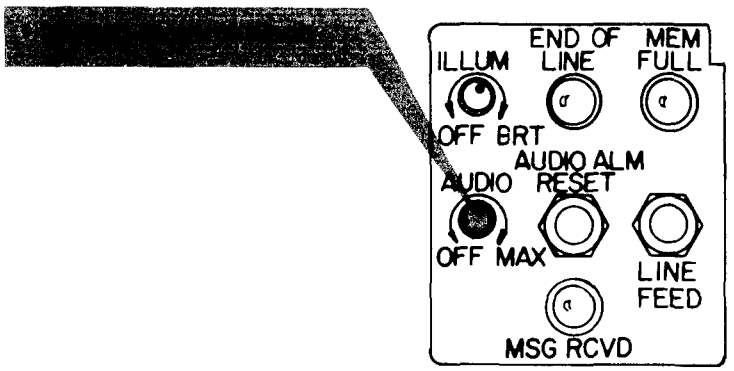

AUDIO ALM (Alarm)

a. An audible indication for the operator's attention.
b. It emits either of the following signals:
   - A momentary tone.
   - A steady tone.

c. The momentary alarm is activated by one of the following:

   (1) Figure S/J codes being received while in Baudot mode.

NOTE

The FIGURES S/J switch is an internal control switch located on the interface assembly (para 2-2).

FIGURES S/J Switch position	Codes to be printed
Switch position S 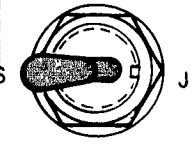 FIGURES	Figure S printed
Switch position J 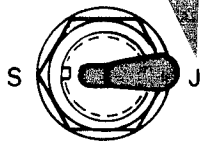 FIGURES	Figure J printed

(2) When a BEL code is received in the ASCII Mode.

d. A steady alarm will sound when:

(1) A message with a precedence of IMMEDIATE or higher has been received. When message is printed, alarm automatically turns off.

(2) An ASCII character with a parity error is received (PARITY RESET lamp lights).

(3) Momentarily pressing PARITY RESET switch turns off alarm and light.

AUDIO ALM RESET Switch

- Resets the audio alarm.

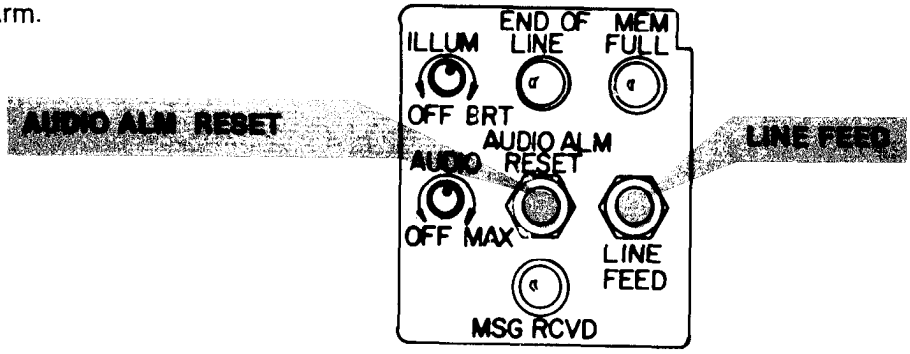

LINE FEED Switch

- Continuously advances paper, line-by-line, until switch is released.

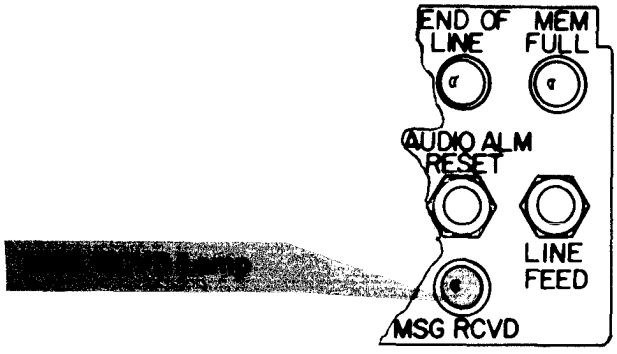

MSG RCVD (Message Received) Lamp

- Lights whenever a message has been received and stored in message memory, but has not been printed.
- Flashes if a message of IMMEDIATE priority or higher is received.
- Remains flashing until message has been printed.

NOTE

Although the following elapsed time meters are not part of the dustcover controls and indicators, they are visible through the copy window.

ELAPSED TIME METERS

- Used as aids in determining the number of hours the terminal has been in operation.

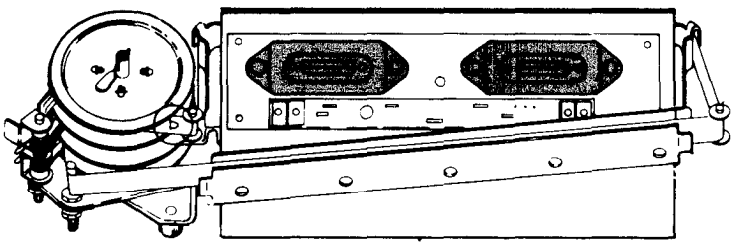

NOTE

Elapsed time meters are installed in terminals serial numbered 1 through 2000. The time meters will be deleted by the manufacturer starting with serial number 2001. Time meters will not be replaced in terminals numbered 1 through 2000 once removed by maintenance.

- One meter measures the hours of printer use up to 1,000 hours.

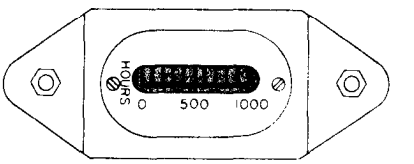

- The second meter measures hours of printer use up to 10,000 hours.

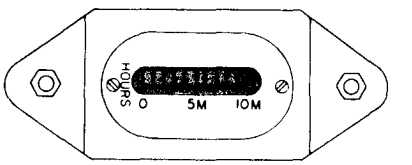

2-2. INTERNAL CONTROLS AND SWITCHES

a. The combined settings of these controls and switches, in conjunction with the terminal configuration, determine the operating state of the system.

b. Access to the internal controls is gained by performing the following:

- Releasing the combination case latches located on both sides of the dustcover.

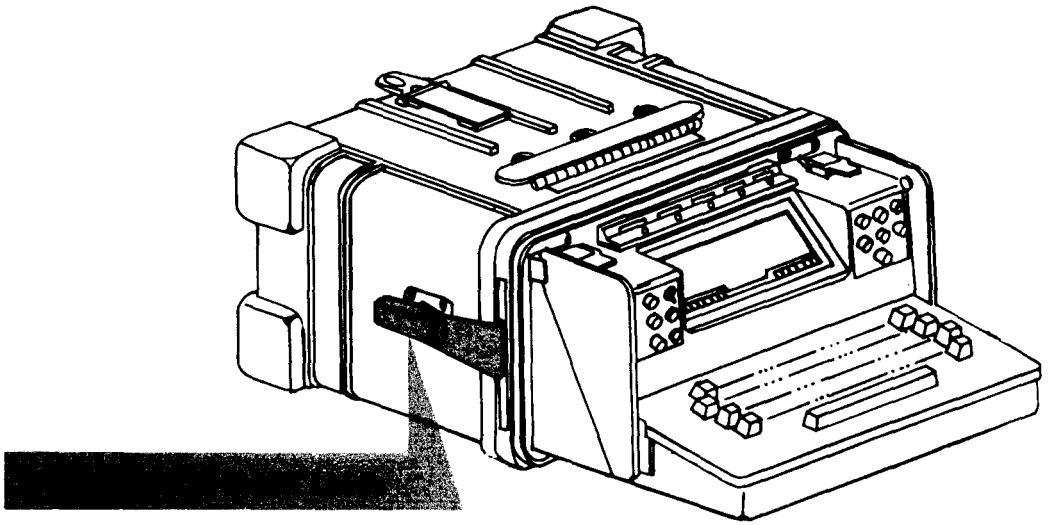

CAUTION

Be careful when extending the terminal from the case; be sure that the cables pass through the terminal rear access port with a minumum of strain.

- Extend terminal out from case.

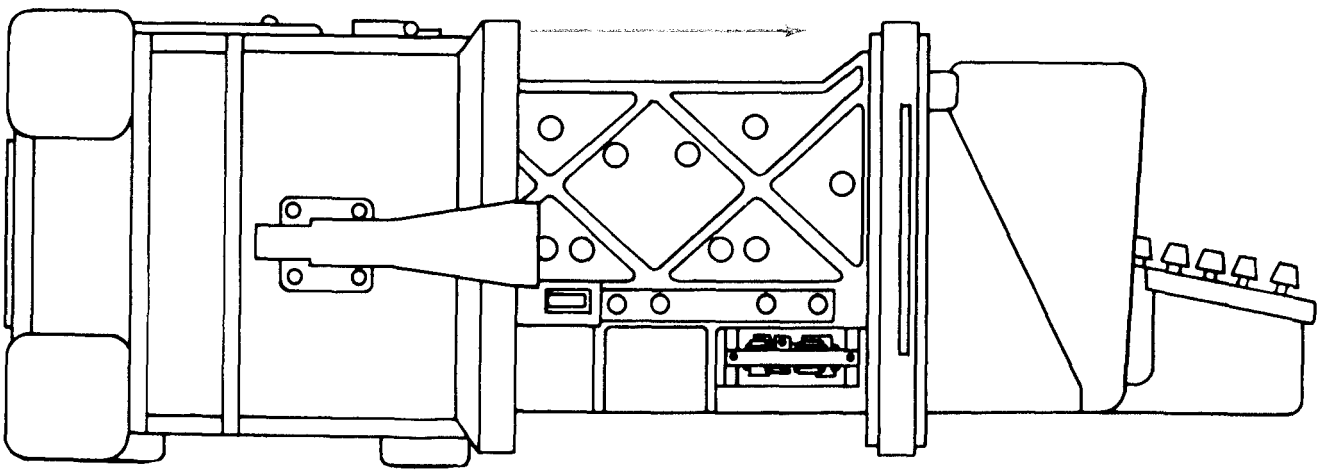

INTERNAL CONTROLS and SWITCHES

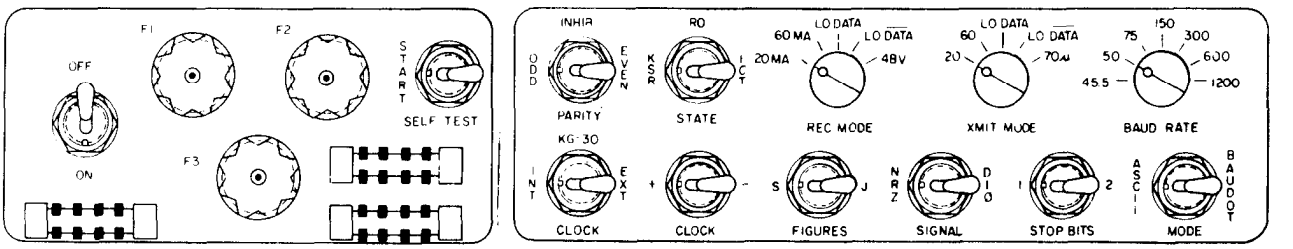

Figure 2-2. TOP VIEW OF INTERFACE ASSEMBLY

INTERNAL POWER ON/OFF SWITCH

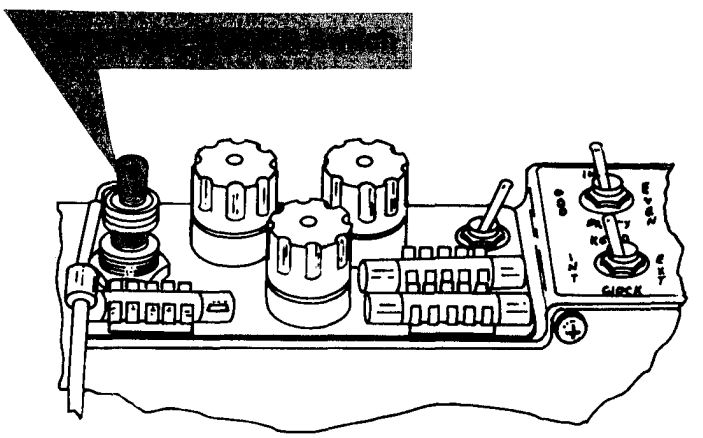

- Primary power source for terminal.
- Mechanically linked to dustcover power switch.
- Carries out same functions as dustcover POWER switch.

FUSES F1 and F2

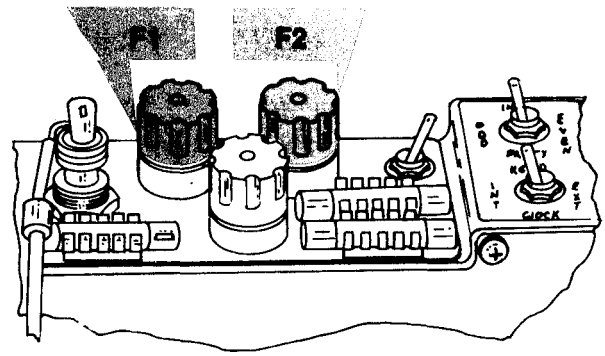

- Protect the electronic circuits from an electrical overload when operating on primary power.

- The source of primary power determines which fuses are used in fuse holders F1 and F2 as shown below:

PRIMARY POWER SOURCE	FUSES USED
26 V dc power	6¼ amp
115/230 V ac power	1½ amp

SPARE FUSES F1 and F2

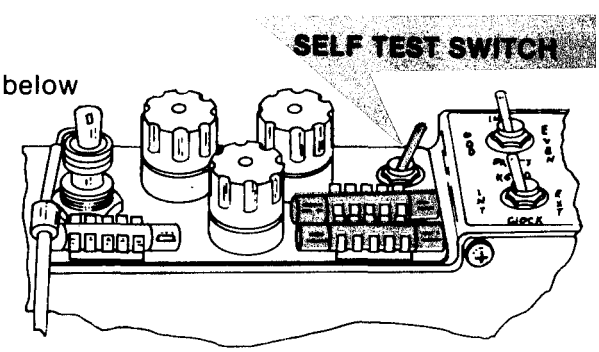

- Stored in the two fuse storage clips located below the SELF-TEST switch.

FUSE F3

- Protects the electronic circuits from an electrical overload when operating in Battery Backup condition.
- Fuse F3 is a 2-amp fuse.

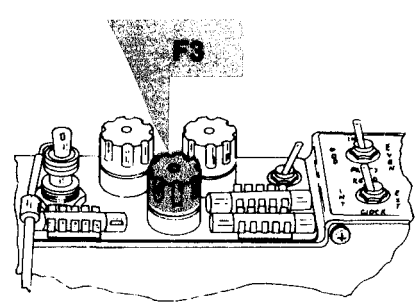

SPARE FUSE F3

- The spare 2-amp fuse is stored in the fuse storage clip located below the INTERNAL POWER ON/OFF Switch.

INTERNAL POWER ON/OFF Switch

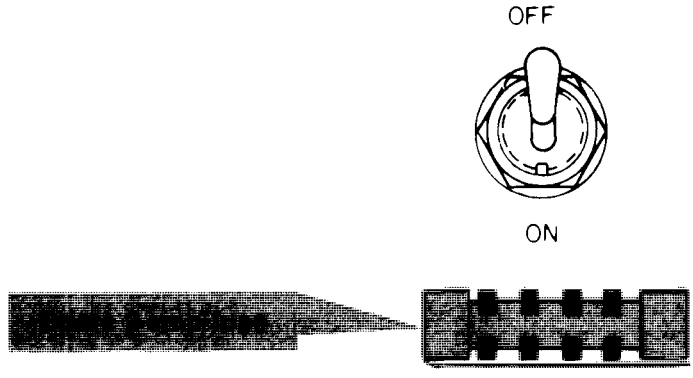

SELF-TEST Switch

- Causes the terminal to initiate a self-test of its logic circuitry.

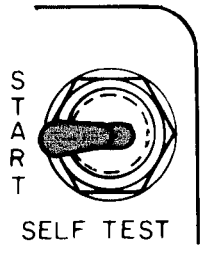

PARITY Switch

- Three position switch which allows an ASCII code to be checked for odd/even parity, and parity inhibit.

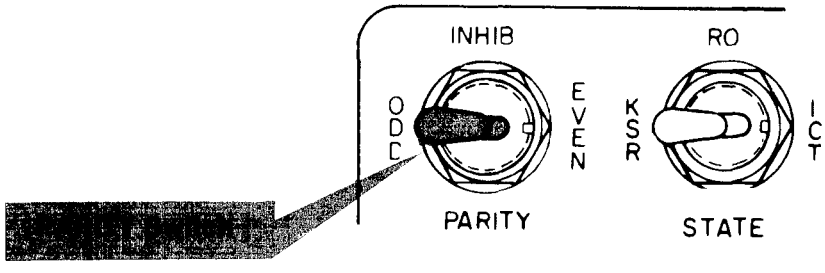

- The ODD parity setting will cause ASCII characters with odd parity to be transmitted.
- Received characters will be checked for odd parity.

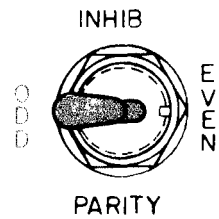

- The EVEN parity setting will cause ASCII characters with even parity to be transmitted.
- Received characters will be checked for even parity.

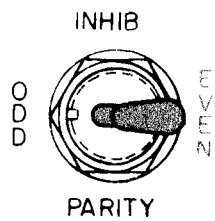

- The INHIB switch position will cause ASCII characters to be transmitted with an indefinite parity.
- Received characters are not checked for parity.

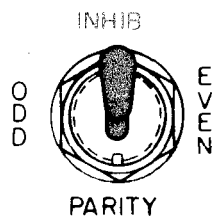

STATE Switch

- This switch is used to select the Receive Only (RO) state, Keyboard Send/Receive (KSR) state, or the Intelligent Communications Terminal (ICT) state.

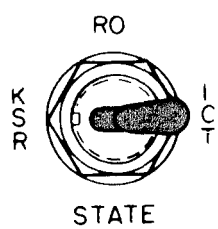

NOTE

Refer to Terminal Operational States (table 2-1) for a detailed explanation of each state.

REC (Receive) MODE Switch

A five-position rotary switch used to select the receiver interface.

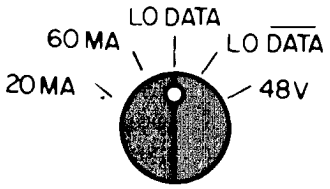

REC MODE

- 20 MA - used for standard interface (high level), 130-volt, 20 milliampere neutral operation.
- 60 MA - used for standard interface (high level), 130-volt, 60 milliampere neutral operation.
- LO DATA - used for noninverted standard low-level operation and KG-30 interface.
- LO $\overline{\text{DATA}}$ - used for inverted standard low-level operation.
- 48 V - used for a 48-volt, 20 milliampere, neutral interface.

NOTE

The AUDIO alarm and LINE lamp are activated when in the LO $\overline{\text{DATA}}$ mode.

XMIT (Transmit) MODE Switch

A five-position rotary switch used to select the transmitter drivers.

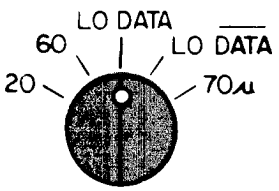

XMIT MODE

- 20 - used for a standard interface (high level), 130-volt, 20 milliampere, neutral operation.
- 60 - used for a standard interface (high level), 130-volt, 60 milliampere, neutral operation.

CAUTION

Use of high level modes at baud rates greater than 150 will increase distortion and may result in loss of data.

- LO DATA - used for noninverted standard low-level operation and KG-30 interface.
- LO $\overline{\text{DATA}}$ - used only for inverted standard low-level operation and KG-30 interface.

NOTE

The AUDIO alarm and LINE lamp are activated when in the LO $\overline{\text{DATA}}$ mode.

- 70 (microampere) - used for COMSEC loop application.

- Determines the terminal's transmitting speed in bits-per-second (BPS).
- ASCII and Baudot code signal speeds are as follows:

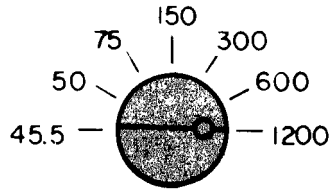

BAUD RATE

ASCII code signal speeds		BAUDOT code signal speeds	
Baud rate	**ASCII code**	**Baud rate**	**ASCII code**
75	10 unit (1 stop bit) 11 unit (2 stop bits)	45.5	7 unit (1 stop bit) 8 unit (2 stop bits)
150	10 unit (1 stop bit) 11 unit (2 stop bits)	50	7 unit (1 stop bit) 8 unit (2 stop bits)
300	10 unit (1 stop bit) 11 unit (2 stop bits)	75	7 unit (1 stop bit) 8 unit (2 stop bits)
600	10 unit (1 stop bit) 11 unit (2 stop bits)		
1200	10 unit (1 stop bit) 11 unit (2 stop bits)		

INT/EXT/(Internal/External) KG-30 Switch

- Determines the source of the clock.
- In INT position, terminal operates at the signal speed as selected by the BAUD RATE switch.

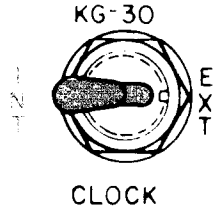

- In the EXT position, terminal operates at a bit-rate equal to the external clock frequency being received.

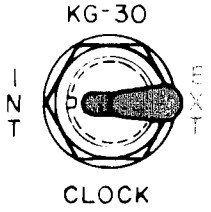

- In the KG-30 position, separate external clocks (gated clocks) are used for transmit and receive functions.

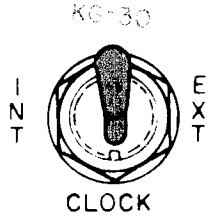

+/−(Positive/Negative) Clock Switch

- Switch is used to determine whether to transmit data on the positive (+) or negative (−) transition of the transmitting clock.
- Used in conjunction with the INT/EXT/KG-30 CLOCK switch.
- Terminal ignores this switch setting when the INT/EXT/KG-30 clock switch is in the KG-30 position.

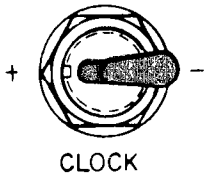

FIGURES S/J Switch

- Used to select whether a figure S or J code will activate the AUDIO alarm.
- Applicable only in the BAUDOT mode.

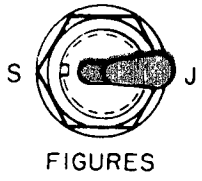

Switch Position	Code to be printed	Action
S	Figure S code	Alarm (No printing)
	Figure J code	Apostrophe prints
J	Figure J code	Alarm (No printing)
	Figure S code	Apostrophe prints

SIGNAL NRZ/DIØ Switch

- Used to select whether the interface transmits and receives NRZ (nonreturn to zero), or conditioned Diphase data signals.

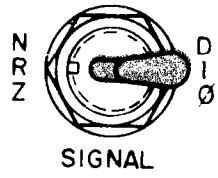

STOP-BITS 1 and 2 Switch

- Used to indicate whether 1 or 2 stop-bits will be transmitted.

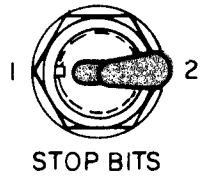

MODE ASCII/BAUDOT Switch

- Determines whether the terminal transmits and receives in ASCII or BAUDOT code.

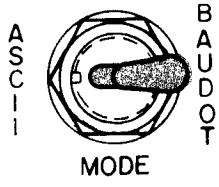

2-3. KEYBOARD KEYS

The terminal has a 62 key ASCII keyboard with space bar.

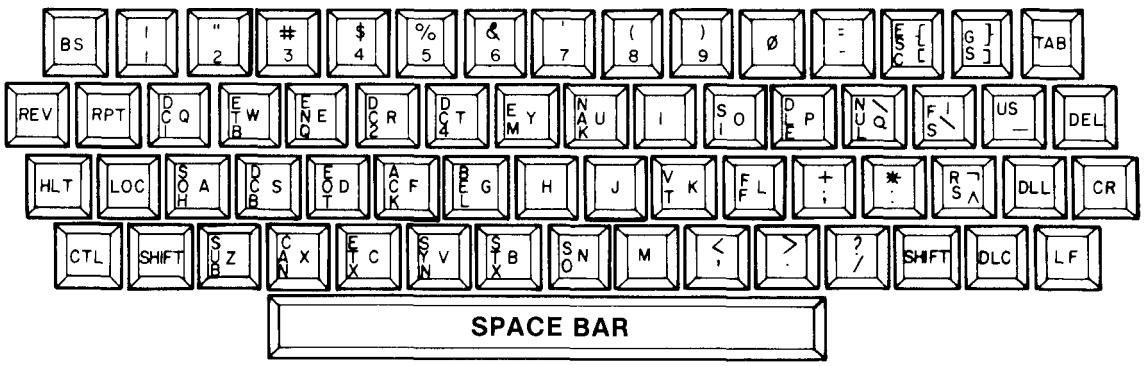

Figure 2-3. TERMINAL KEYBOARD KEYS

- Contains all letters of the English alphabet arranged in the same manner as on a standard typewriter.
- Numbers zero through nine.
- Four basic editing keys (DLC, DLL, REV, HLT).
- 28 keys that are operated along with the Control key.

NOTE

Appendix E explains ASCII and contains tables that list the keyboard printed characters in the ASCII and Baudot modes of operation, including lower case letters and control key codes.

BS (Backspace) Key

- In ASCII mode, BS key performs normal backspace function.
- In Baudot mode, key causes a figure code to be entered into message memory.

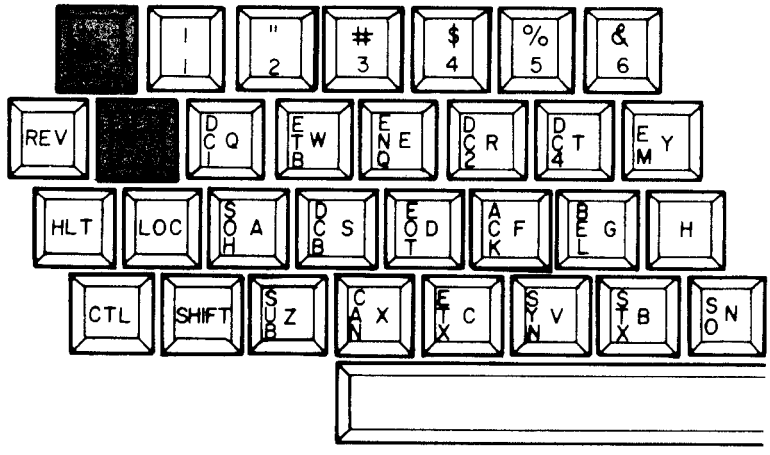

RPT (Repeat) Key

- Causes last printed character to be repeatedly entered into logic system.
- Printed at a rate of five characters-per-second until RPT key is released.

DEL (Delete) Key

- In ASCII mode, generates normal delete code causing a space to be printed locally.
- In Baudot mode, causes a letter code to be individually entered into message memory.

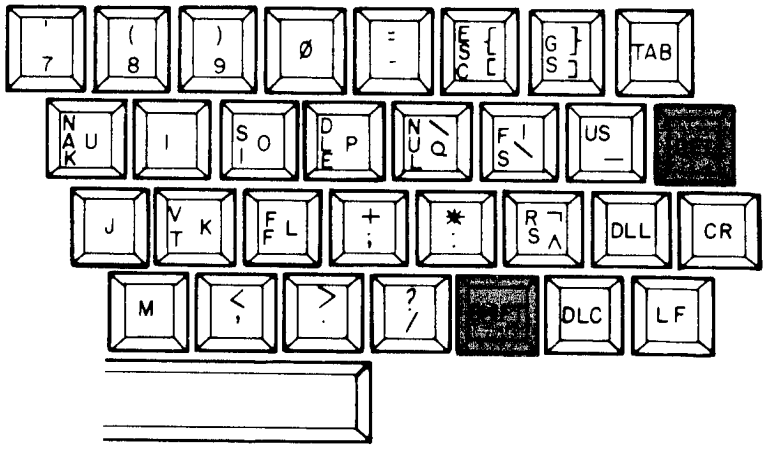

SHIFT Key

- Causes uppercase key symbols to be printed in the shifted mode.

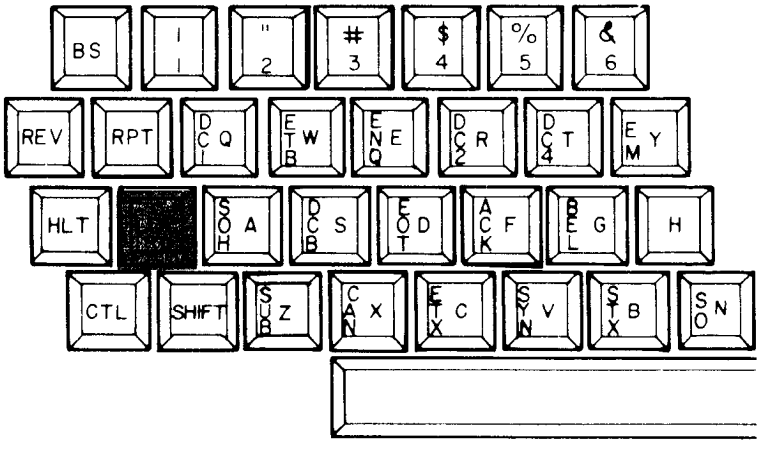

LOC (Lock) Key

- Locks keyboard in shifted mode.
- Lock is released when the key is pressed a second time.

TAB Key

NOTE

Tabs can only be set in the ICT state.

- Moves print position to first tab set.
- Next character will be printed in tab set position.
- If printer has passed last tab set position, pressing TAB key will cause CR & LF.

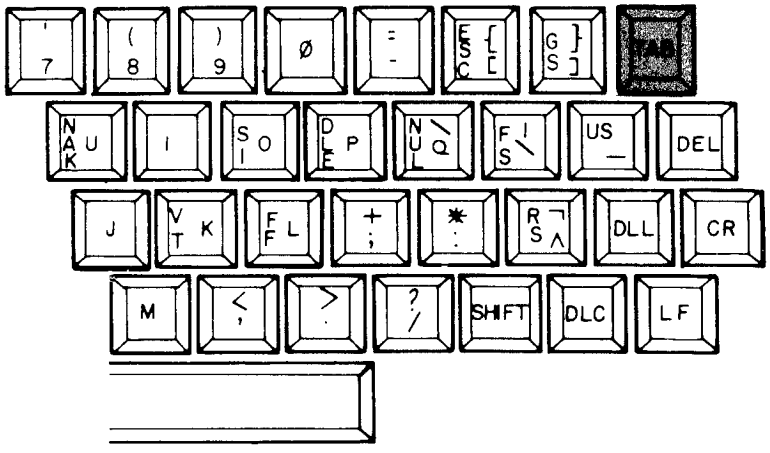

CR (Carriage Return) Key

- Causes print position to move to left hand margin. Line-feed occurs.
- In KSR state, a CR causes current print line to be transmitted.

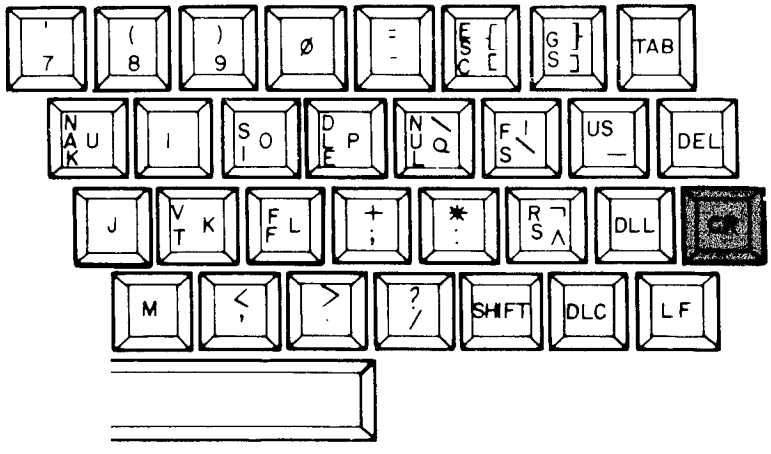

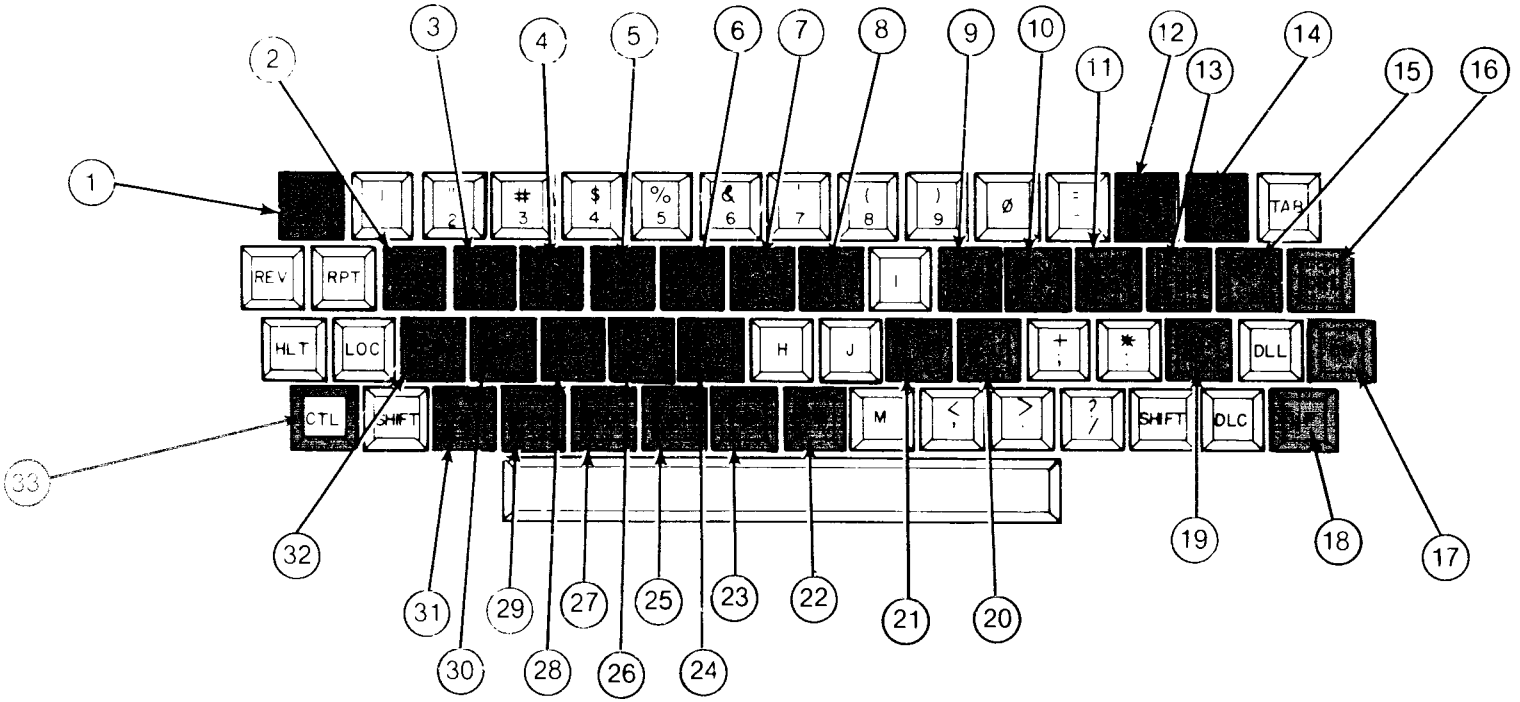

Figure 2-4. CONTROL KEYS

Control Characters

1 BS Backspace (FE)
2 DC1 Device Control 1
3 ETB End of Transmission Block (CC)
4 ENQ Enquiry (CC)
5 DC2 Device Control 2
6 DC4 Device Control 4 (Stop)
7 EM End of Medium
8 NAK Negative Acknowledge (CC)
9 SI Shift In
10 DLE Data Link Escape (CC)
11 NUL Null
12 ESC Escape
13 FS File Separator (IS)
14 GS Group Separator (IS)
15 US Unit Separator (IS)
16 DEL Delete[1]
17 CR Carriage Return (FE)
18 LF Line-Feed (FE)
19 RS Record Separator (IS)
20 FF Form Feed (FE)
21 VT Vertical Tabulation (FE)
22 SO Shift Out
23 STX Start of Text (CC)
24 BEL BEL (Audible or attention signal)
25 SYN Synchronous Idle (CC)
26 ACK Acknowledge (CC)
27 ETX End of Text (CC)
28 EOT End of Transmission (CC)
29 CAN Cancel
30 SUB Device Control 3
31 DC3 Substitute
32 SOH Start of Heading (CC)
33 CTL Control Key

NOTE

Refer to Appendix E, paragraph E-5 for a detailed explanation of abbreviations (CC), (FE), and (IS) and use of control and graphic characters.

Abbreviations	Meaning
(CC)	Communication Control
(FE)	Format Effecter
(IS)	Information Separator
(1)	In the strict sense, DEL is not a control character

CTL (Control) Key

- Activates keys that have control character groups.
- Used only when terminal is main part of a computerized communication system.
- Refer to Appendix E for detailed instructions on use of Control key and control activated keys.

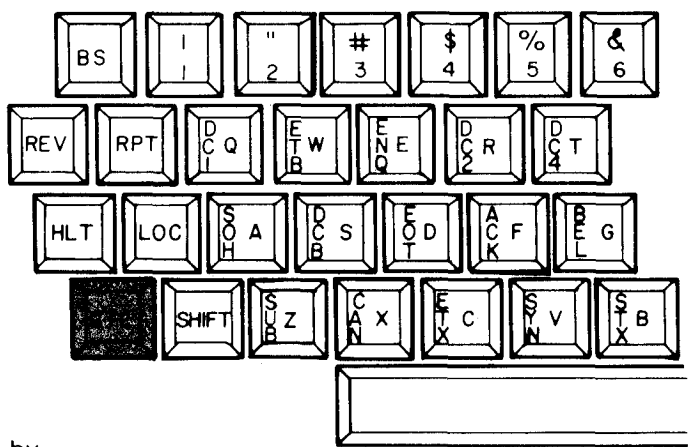

NOTE

When a control character is represented by a single graphic symbol, the symbol is that which appears to the right of the control abbreviation in Table E-1, Appendix E.

NOTE

The following four keys are used by the operator in performing basic message editing.

DLC (Delete Last Character) Key

- Used to erase incorrect or unwanted characters from memory.
- Prints a backward slash (/) over unwanted character.
- Slash indicates character has been erased from message memory.
- Key is only valid on current print line.
- In ICT state, CR and LF will occur when print position is moved back to lefthand margin by pressing key.
- When 81st character is entered on current line. CR and LF will occur.
- Terminal prints remainder of line.

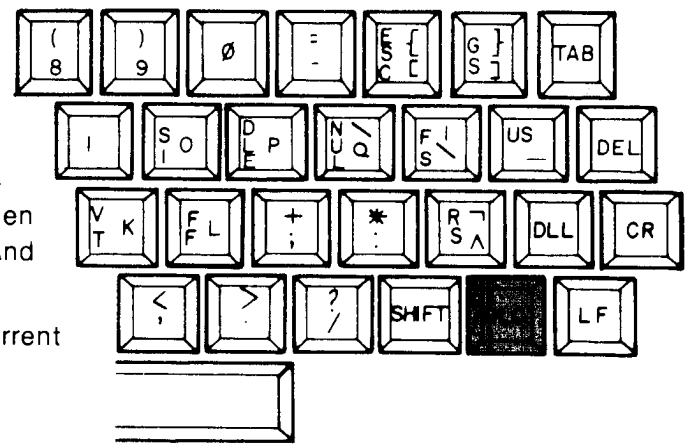

DLL (Delete Last Line) Key

- Erases current input line from storage.
- Terminal responds with a CR and LF indicating current line has been erased.
- If no printing occurs on current input line, terminal responds with a CR and LF.

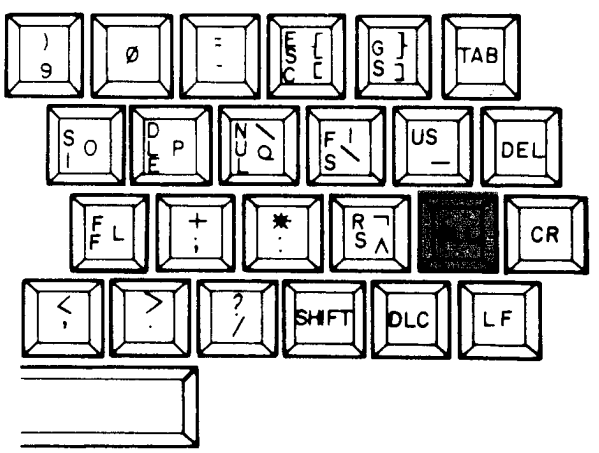

REV (Review) Key

- Causes terminal to automatically reprint current input line (before CR is entered) for operator's review.
- Additional characters may be added to line following last character.
- If no printing occurs on current input line, terminal responds with CR and LF.

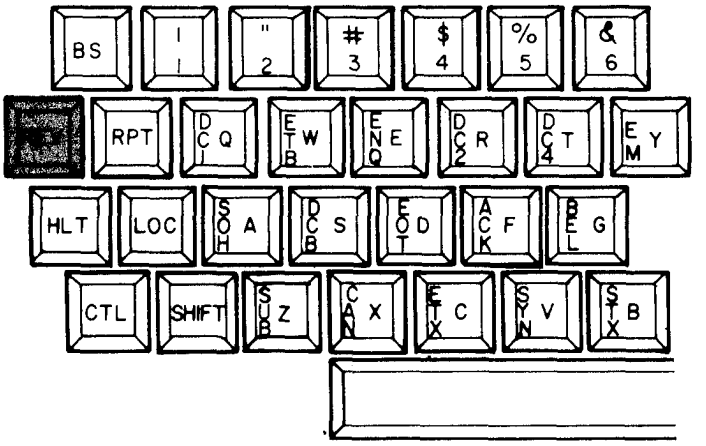

HLT (Halt) Key

- Allows operator to restrict local printing of message being transmitted. However,other messages can be printed from message memory.
- Operates in ICT state.
- Stops any operator-intiated printing.
- Terminal responds by printing error message number 17, "Printing Aborted".
- Transmits a message while in KSR state.

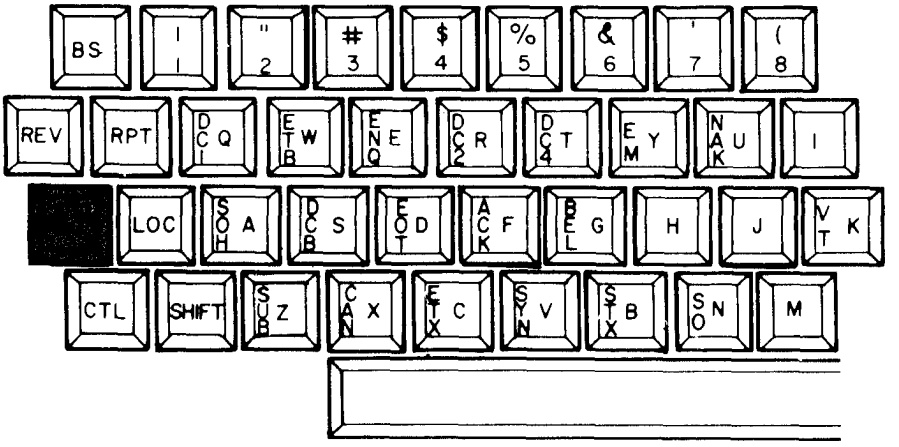

2-4. OPERATIONAL STATES AND NONOPERATIONAL CONDITIONS

The AN/UGC-74A(V)3 system is composed of three operational states and five nonoperational conditions.

a. The operational states are operator selectable using the STATE switch (refer to fig. 2-5). These operational states are the only states in which the terminal is capable of operating as a communications terminal.

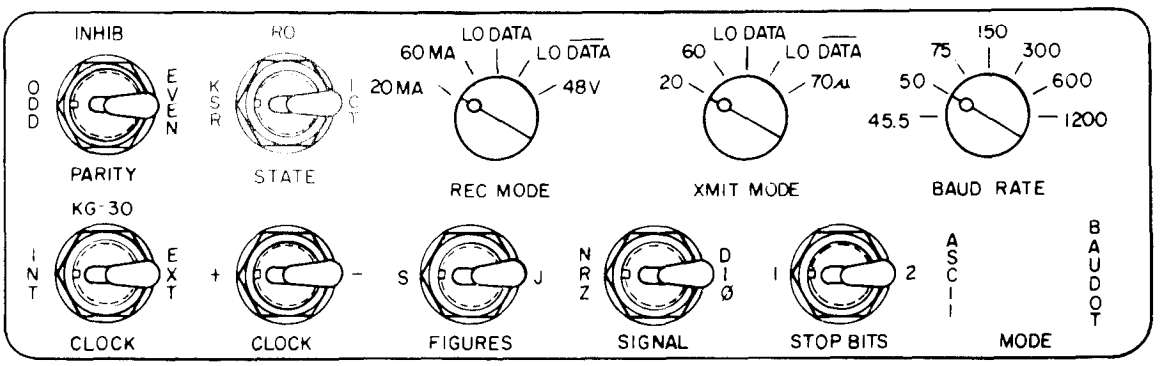

Figure 2-5 STATE SWITCH

(1) The three operational states are:
- Receive Only (RO) state.
- Keyboard Send/Receive (KSR) state.
- Intelligent Communication Terminal (ICT) state.

(2) In each of the operational states, the terminal is capable of receiving messages. In the KSR and ICT operational states, the terminal is also capable of transmitting messages.

b. The five nonoperational conditions of the terminal are as follows:

(1) OFF condition (power switch in OFF position).
(2) Cold Start (power applied to terminal).
(3) Operation Validation/State Determination (system initialization).
(4) Battery Backup (prime power removed).
(5) Self-Test (system readiness check).

c. An explanation of the operational states (table 2-1) and nonoperational conditions (table 2-2), which comprise the AN/UGC-74A(V)3 system follows.

Table 2-1. OPERATIONAL STATES

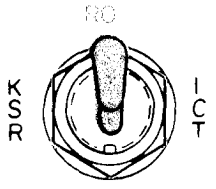

STATE

1. RECEIVE ONLY (RO) State

   a. Message Memory Not Present (unbuffered)
      - Prints messages line-by-line.
      - Has no compose, edit, or transmit capability.
      - If the sending station exceeds the printers print rate (600 baud), part of the message will not be received. Messages will have to be retransmitted.
      - Cannot enter Battery Backup condition.
      - Capable of entering Self-Test condition.

   b. Message Memory Present (buffered)
      - Same characteristics as listed for Message Memory Not Present except:

        (1) The presence of message memory allows the memory to act as a buffered printer.

        (2) For example:
            - Data received goes into memory.
            - Data is printed out at the printers rate (600 baud).
            - No message parts are lost.
            - Battery Backup condition can be entered.

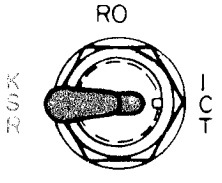

STATE

2. KEYBOARD SEND/RECEIVE (KSR) State

   - Sends one line of text (up to 80 characters) after the carriage return (CR) key or the HLT key is activated on the keyboard.
   - Prints a received line of text after:
     (1) A carriage return is found in the received text.
     (2) The 81st character is received.
     (3) A 0.5 to 1.5 second time lapse between received characters is detected.

Table 2-1. OPERATIONAL STATES - Continued

- Provides editing of one line of text using DLC, DLL and REV keys.
- Does not automatically attach or interpret communications envelopes, end-of-line sequences or redundant carriage returns.
- Can enter Battery Backup condition.
- Can enter Self-Test condition.
- Transmits only upper case letters.

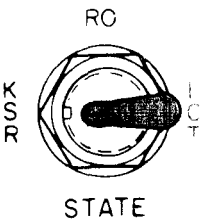

3. INTELLIGENT COMMUNICATIONS TERMINAL (ICT) State

- Prints out entire messages.
- The system recognizes the closed communication envelope of the message. This recognition causes the MESSAGE RECEIVED lamp to light, which informs the operator that the message has been stored in message memory.
- The message can be printed out at the operator's convenience.
- Can compose, edit and transmit complete messages.
- Transmits and interprets communications envelopes, end-of-line sequences and redundant carriage-returns.
- Can use the SYSTEM's Command Functions to compose, edit and transmit messages.
- Can enter the Battery Backup condition.
- Can enter the Self-Test condition.

Table 2-2. NONOPERATIONAL CONDITIONS

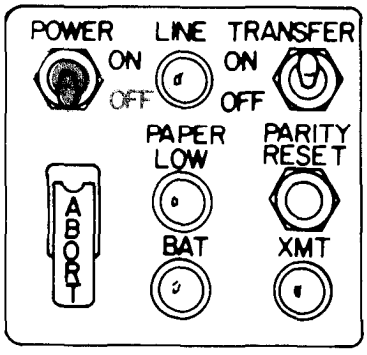

1. OFF Condition

- Automatically entered whenever the following occurs:
  (1) Dust cover POWER switch is turned OFF
  (2) Primary power fails and no battery backup is provided.

NOTE

If battery backup is provided, the system automatically enters the Battery Backup condition.

- Primary power input causes this condition to end.

2. COLD START Condition

- The system "Energizing" condition.
- Message memory is empty.
- Upon completion of energizing, the system prints "SYSTEM INITIALIZED".
- The system then automatically enters the Operation Validation/State Determination condition.

3. OPERATION VALIDATION/STATE DETERMINATION Condition

- The system performs an Operation Validation test by determining if a keyboard and message memory are present and then determining the internal switch settings and their combined configuration. Based on this examination, the operational state of the terminal is determined and stored in memory.

NOTES

1. If any combination of switches produces an illegal configuration, the terminal prints "IMPROPER SWITCH SETTINGS" and ignores all inputs. The POWER switch must be turned OFF, the switches reset, and the system processed through this point again.
2. The illegal configurations are:

   ASCII below 75 baud
   ASCII Diphase below 300 baud
   Baudot above 75 baud
   Baudot-Diphase

Table 2-2. NONOPERATIONAL CONDITIONS-Continued

4. BATTERY BACKUP Condition

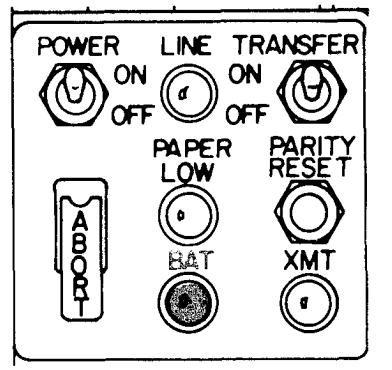

- Protects message memory data if primary power fails.
- Automatically entered whenever primary power fails and a backup battery is connected to the terminal.
- If no backup battery is present, the OFF condition is entered.
- When the Battery Backup condition is entered the BAT lamp lights.
- No data processing is performed.
- Printer, keyboard, and interface assemblies are nonoperational.

5. SELF-TEST Condition (para 2-5)

- Can be entered anytime after the Cold Start condition has been completed.
- Is operator initiated.
- Performs a series of tests on the terminal's circuitry.
- Informs operator of terminals operating ability.
- If the terminal fails test No. 3 or No. 4 in table 2-3, a failure message identifying the replaceable subassembly will be printed (if possible).
- Refer to table 2-3, "The Self-Test", for a detailed explanation.

2-5. SELF-TEST Condition

a. In the Self-Test condition, the system performs a series of tests on its circuitry with operator assistance, to determine the operational readiness and reliability of the system.

(1) The purpose of Self-Test is to examine the following assemblies of the system:

- CPU circuit card assembly 3A1A1.
- Printer circuit card assembly 3A1A4.
- Memory circuit card assembly (if present) 3A1A2.
- Communications circuit card assembly 3A1A3.
- Keyboard (if present).

(2) If the memory circuit card assembly and/or keyboard are not present during the test, the system passes over that assembly and proceeds to the next test.

CAUTION

Upon initiation of the Self-Test, the system automatically erases all messages in memory. For this reason, any messages in message memory should be printed out prior to the Self-Test being initiated.

(3) If, at any time, a test fails, the system will (if possible):

- Print out a "FAIL" message.
- Call out the assembly being tested at the time of failure.
  Example: A1A2 FAIL (test failed during memory circuit card assembly test)

(4) All testing stops during Self-Test when a test fails.

- Operator must notify organizational maintenance for corrective action.

(5) After corrective action, Self-Test must be repeated for the following reasons:

- To confirm that the fault has been corrected.
- To test any assemblies not tested previously because of the failure.

(6) The system power supply is not tested as an independent test, but rather by usage.

(7) The power supply capability is tested while performing the other test.

(8) The power supply may fail completely when power is applied and the Self-Test START switch is activated.

(9) Power supply may partially fail when low voltage is supplied to assemblies.

- These occurrences must be recognized by the operator as system failures.

b. Perform the following procedures before starting the Self-Test: (table 2-3).

- Release the combination case latches.

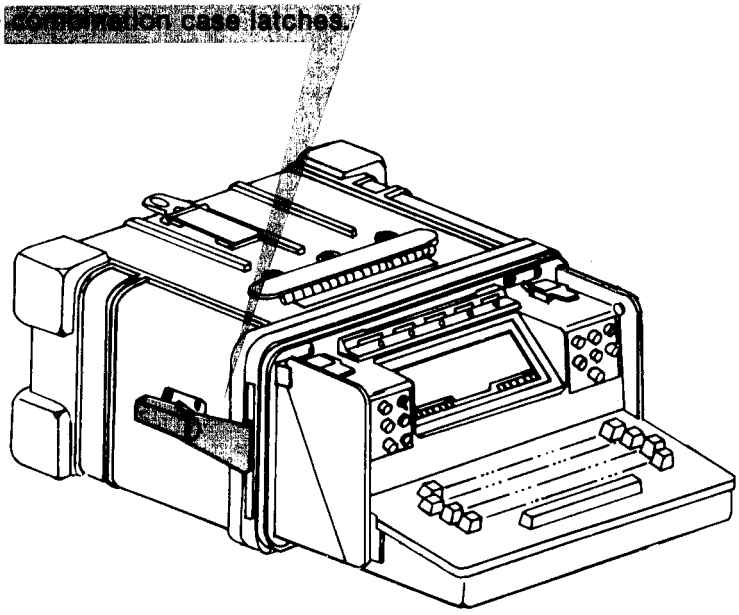

NOTE

To release latches, press safety latch located on the bottom of the right combination case latch and the top of the left combination case latch.

CAUTION

Use extreme care to insure the connector cables in the rear of the terminal are carefully pulled through the rear opening so as to prevent damage to the cables or connectors.

- Extend terminal forward until the slides stop.

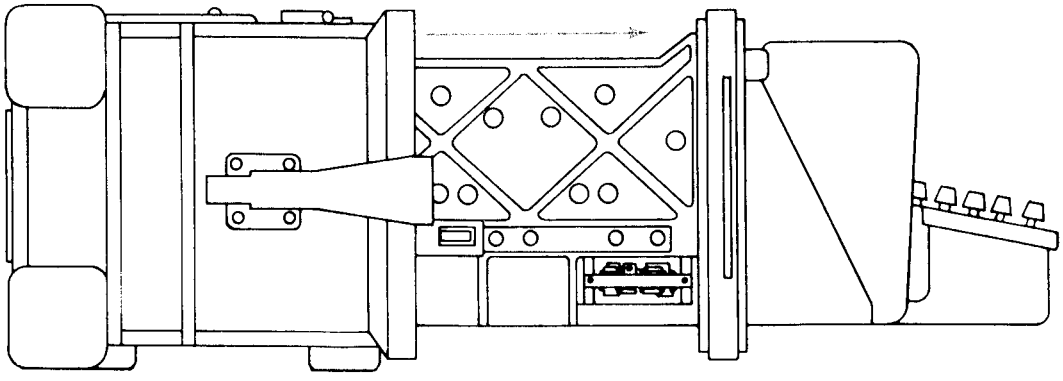

EXTENDED POSITION

- The INT/EXT/KG-30 CLOCK switch must be in the INT position.

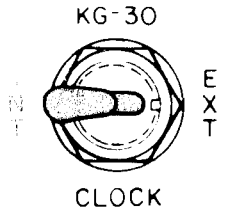

- Set ILLUM control to BRT and AUDIO control to MAX

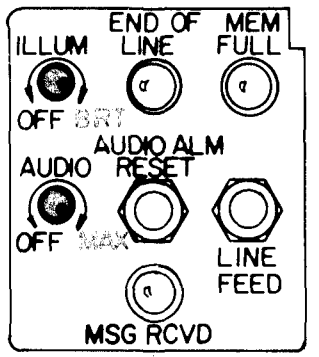

- Place the POWER switch in the ON position.

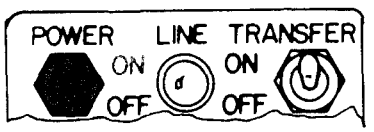

NOTE

Drum starts to rotate, dustcover lamps flash on momentarily, copy lamps light, and audio alarm sounds momentarily.

- Terminal prints the operation Validation/State Determination message.

NOTE

Read the Normal test indication before performing each test. Notify organizational maintenance if there is a test failure indication.

. To start test 1, momentarily operate the spring-loaded SELF-TEST switch on the Interface assembly, to the START position.

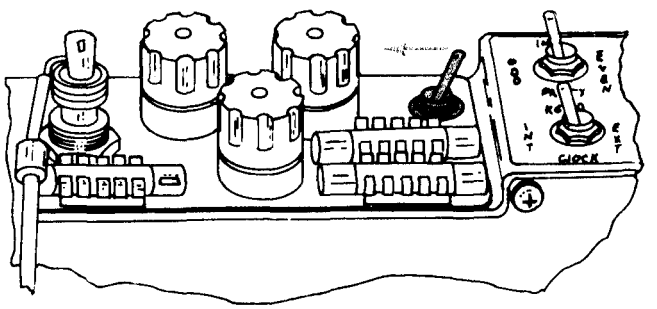

Table 2-3. SELF-TEST

TEST	ASSEMBLIES BEING CHECKED	NORMAL TEST INDICATION	TEST FAILURE INDICATION
1	CPU circuit card assembly	a. All dust cover indicator lamps, except PARITY lamp, turn on immediately. The Battery lamp is off. b. Two to four seconds later, PARITY lamp turns on.	**NOTE** Terminal will print (if possible) test failure indication. PARITY does not turn on.
2	Printer circuit card assembly	a. When all indicator lamps except BAT are on, press the PARITY RESET switch to continue the testing. b. All indicator lamps except the END-OF-LINE lamp, turn off. c. The printer prints the letter "E" in all 80 print character columns. d. After executing a line-feed and carriage return, the terminal prints all 64 individual print characters on the print drum, executes a carriage-return, two line-feeds, and lowers the ribbon. PARITY lamp turns on.	PARITY lamp remains off or a printer error is seen.
3	Memory circuit card assembly	a. Press PARITY RESET switch to continue testing. **NOTE** If memory board is not present, terminal will continue testing the communications board. b. The LINE lamp is the only indicator on.	Memory card failure indicated.

Table 2-3. SELF-TEST - Continued

TEST	ASSEMBLIES BEING CHECKED	NORMAL TEST INDICATION	TEST FAILURE INDICATION
4	Communication circuit card assembly	a. Press PARITY RESET switch to continue testing. b. LINE lamp is the only indicator on. c. A standard 80-character print-out is transmitted and looped back through the receiver. The received message is compared to the transmitted message. If the two messages are identical, terminal prints out message. d. PARITY lamp turns on at the same time the printing begins. e. Terminal will transmit, receive, and print 80-character message until PARITY RESET switch is pressed. Pressing the switch also causes testing to continue.	Communication circuit card failure indicated.
5	Keyboard	**NOTE** If keyboard is not present, testing will end at this time. a. PAPER LOW lamp is only indicator on. b. Terminal prints "KEYBOARD TEST" executes one carriage-return and two line-feeds. c. PARITY lamp turns on. d. Operator can freely enter keyboard characters and verify that the proper characters are being printed. Keyboard is functioning properly if printout agrees with what was typed on the keyboard.	

Table 2-3. SELF-TEST - Continued

TEST	ASSEMBLIES BEING CHECKED	NORMAL TEST INDICATION	TEST FAILURE INDICATION
5	Keyboard (cont)	e. Operator ends SELF-TEST by pressing PARITY RESET switch. f. Terminal will print "READY", then automatically prints out operational state message. **NOTE** If it becomes necessary to change the INT/EXT/KG-30 CLOCK switch, place POWER Switch in the OFF position, and reset switch. Reapply power by placing POWER switch in the ON position. g. After completing test, turn POWER OFF. Return the terminal to it's case and secure the combination case latches.	

Section II. PREVENTIVE MAINTENANCE CHECKS AND SERVICES (PMCS)

2-6. GENERAL

Operator preventive maintenance is the systematic care, servicing and inspection of equipment to prevent the occurrence of trouble, to reduce downtime, and to keep it in good operating condition.

a. Systematic Care

The procedures given in table 2-4, explain routine, systematic care and cleaning essential to proper upkeep and operation of the terminal.

b. Preventive Maintenance Checks and Services

The preventive maintenance checks and services (PMCS) described in table 2-4 outline the functions to be performed at specific times. These checks and services are to maintain Army telecommunications equipment in good, general (physical) condition and in good operating condition. To assist operators in maintaining combat serviceability, the table indicates what to check, how often, how to check, and what conditions will cause equipment not to be "ready" (for readiness reporting purposes).

- Records and reports of these checks and services must be made in accordance with the requirements set forth in TM 38-750.

NOTE

Always keep in mind all CAUTIONS and WARNINGS when PMCS is performed.

- Before operating - perform the before (B) PMCS.
- While operating - perform the during (D) PMCS.
- After operating - perform the after (A) PMCS.

- If the equipment fails to operate, troubleshoot using table 3-1. Report any deficiencies to organizational maintenance using the proper forms as specified in TM 38-750.

c. Periodic Checks and Services

(1) Table 2-4 specifies checks and services that must be performed by the operator, as specified in the Interval Column, and under the following special conditions:

- When the equipment is initially installed.
- If the equipment is maintained in a standby condition (ready for immediate operation) PMCS is performed (monthly).
- When the equipment is reinstalled after removal for any reason.

(2) If the equipment must be kept in continuous operation, check and service only those items that can be checked and serviced without disturbing operation.

(3) Make the complete checks and services when the equipment can be shut down.

(4) Within designated intervals, these checks are to be performed in the order listed:

B - Before operating

D - During operations

W - Weekly

M - Monthly

(5) Any deficiencies noted by the operator beyond his capability to correct are to be reported to organizational maintenance.

d. Special Instructions

(1) Perform the monthly maintenance procedures - as indicated in table 2-4 at least once a month. For purposes of this manual, a month is defined as approximately 30 calendar days of 8 hour-a-day operation. If the equipment is operated more than 8 hours per day, monthly maintenance intervals should be adiusted as follows:

Hour-a-Day Operation	Monthly PMCS Required (calendar days)
8	30
16	15
24	10

(2) Equipment in limited storage (maintenance service required before being operated) does not require PMCS.

(3) Routine checks like equipment inventory, cleaning, dusting, washing, checking for frayed cables, stowing items not in use, covering unused receptacles, and checking for loose nuts and bolts are not listed as PMCS checks. They are things that should be done anytime the need arises. If you find a routine check like one listed in your PMCS, it was listed because other operators reported problems with this item.

(4) When you are doing any PMCS or routine checks, keep in mind the WARNINGS and CAUTIONS.

2-7. OPERATOR PREVENTIVE MAINTENANCE CHECKS AND SERVICES TABLE (Table 2-4)

NOTE

If operating the terminal for the first time, or have not operated the terminal since the last weekly check, perform weekly as well as before operations PMCS.

Table 2-4. OPERATOR PREVENTIVE MAINTENANCE CHECKS AND SERVICES

B—Before Operating D—During Operating W–Weekly M–Monthly

Item No.	Interval B	D	W	M	Item to be inspected	Procedures Check for and have repaired for adjusted as necessary	Equipment Is Not Ready/Available If:
						NOTE Refer to appropriate paragraphs for assistance.	
1				●	Mounting	Check the mounting of the terminal to ensure it is secure.	
2				●	Dust cover	a. Inspect the dustcover alignment against the chassis assembly. Check the condition of the four front cover latches. They should open with resistance, but smoothly. b. With the dustcover lowered, inspect the rubber seal on the chassis assembly for wear, gouges, tears or missing sections.	
3				●	Primary power source cables and connectors	Inspect for undue strain caused by twisting or tangling which would cause damage to the cables or connectors as the terminal is being extended from or returned into the outer case.	Unserviceable cables or connectors prevent ing the terminal from being operated.
4				●	Case interior	a. Release the combination case latches and carefully extend the terminal from the outer case. (1) The terminal should slide smoothly out from the outer case to the stop locks. (2) If the terminal hangs or fails to to slide smoothly, check for dirt, burrs, or other obstructions. b. Clean the case interior of oil, dust, grease, moisture or fungus. c. Clean the interior of the terminal with a long handle sash or camel's hair brush.	Excessive dirt, dust, grease, moisture, or fungus would prevent he terminal from operating properly, or if operated, would cause possible damage or malfunctioning of the terminal.
5				●	Print drum printing	Check the quality of the print drum printing by inspecting the message copy for readability.	Message copy is unreadable.

Table 2-4. OPERATOR PREVENTIVE MAINTENANCE CHECKS AND SERVICES - Continued

Item No.	Interval B	D	W	M	Item to be inspected	Procedure Check for and have repaired or adjusted as necessary	Equipment is not ready/available if:
6	●				Paper supply	Inspect for the adequacy of the paper supply. Replenish in accordance with instructions contained in paragraph 3-5.	Paper is not available.
7	●				Inking ribbon	Inspect the inking ribbon for signs of fraying, wear, dryness or unserviceability. Replace if necessary in accordance with instructions contained in paragraph 3-6c .	Inking ribbon is not available.
8			●		Elapsed time meters	Check the operational hour readings on the elapsed time meters. Notify organizational maintenance when the meters exceed their prescribed limits of either 1,000 or 10,000 hours (para 2-1d).	
9			●		Backup battery (if present)	Perform battery preconditioning as directed in paragraph 3-9. Turn POWER OFF, return terminal back into case, and secure latches.	

Section III. OPERATION UNDER USUAL CONDITIONS

2-8. PRELIMINARY STARTING PROCEDURES

a. The following procedures must be accomplished before applying power to the terminal.

- Check that the POWER Switch is in the OFF position.
- Check that the primary power cable is connected to the primary power source, and to the J2 power connector located on the rear panel.

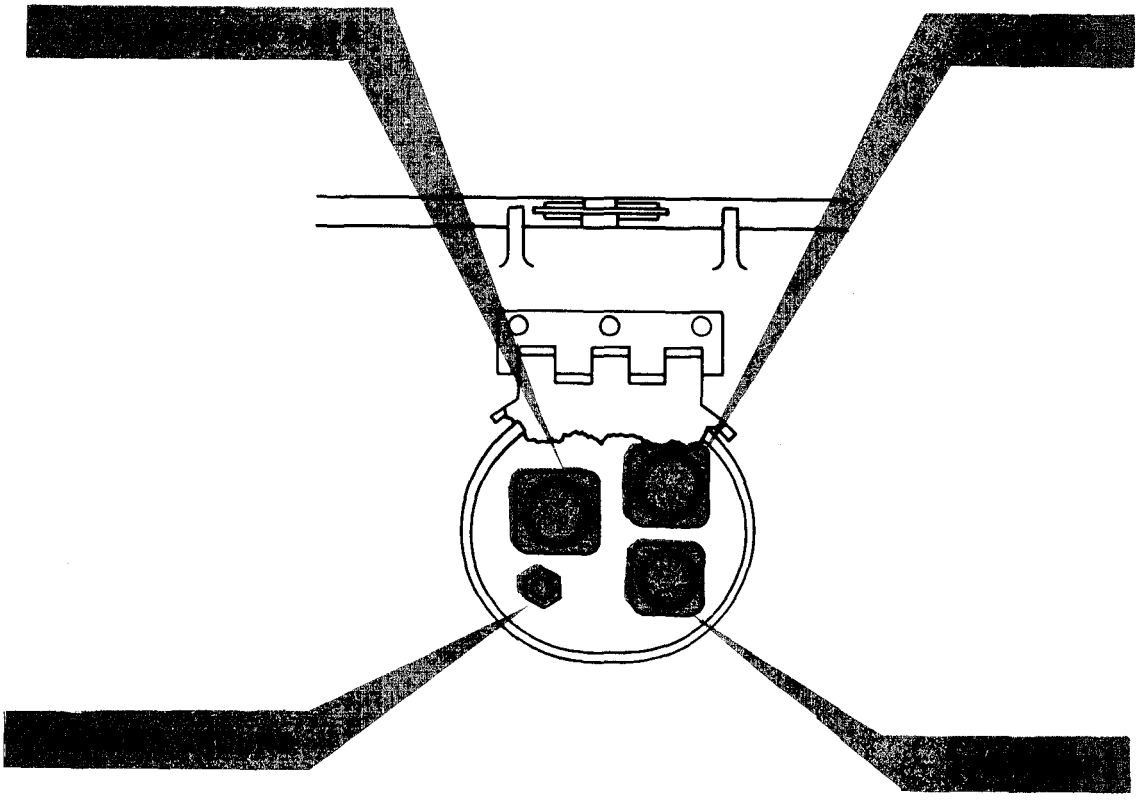

- Check that the J1 Clock and Data connector is connected to a suitable signal line and to the J1 connector, located on the rear panel.
- Check that the backup cable is connected to a suitable 12-volt dc power source. Check that the backup cable connector is connected to the J3 connector located on the rear panel of the terminal.

- Check that the ground strap is attached to any low-resistance ground connector and to the ground lug (E1) located on the rear panel.

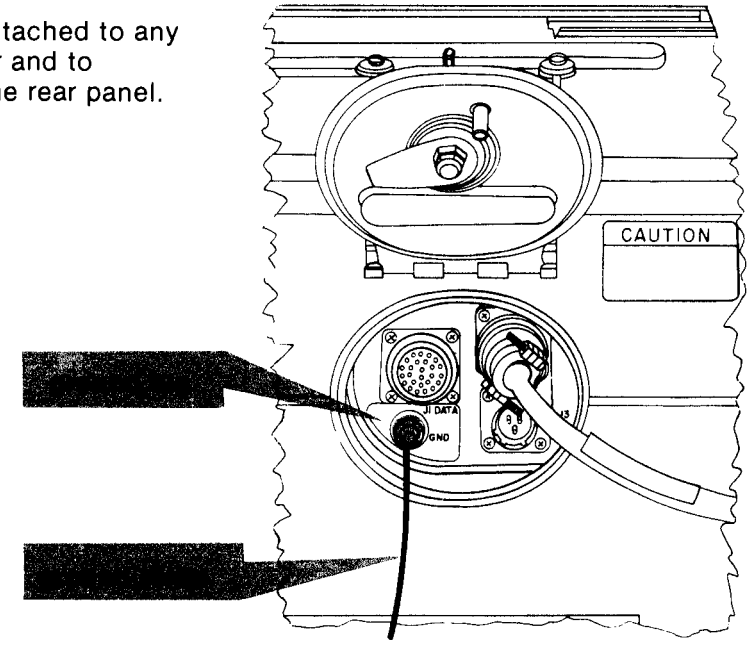

b. If the copyholder is not mounted on the terminal, install it using the following procedure:

- Remove the copyholder and mounting screw knob from the front case cover storage compartment.
- Unfold the two hinged sections to form one flat plane section.

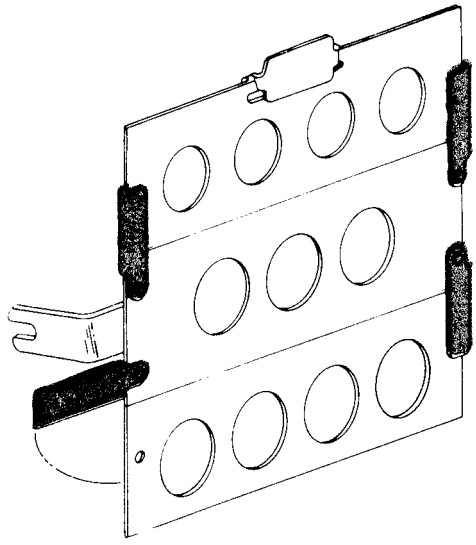

- Secure hinged sections to the center section by closing the four [redacted] located at each of the center sections.

- Remove the copyholder mounting screw knob and washer located on the right side of the copyholder by turning the screw counterclockwise.

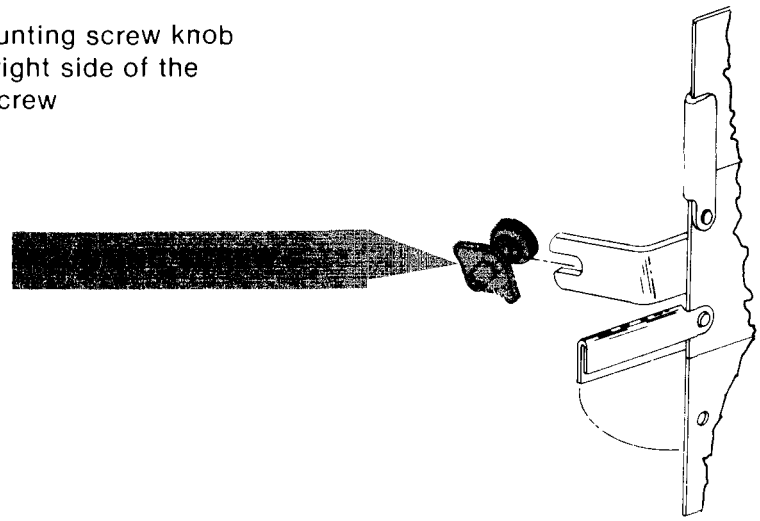

- Insert the mounting screw knob and washer into the threaded hole (press fitted nut) located on the upper right hand side of the dustcover, turning the screw clockwise. Do not tighten. (Tightening can cause damage to the press fitted nut.)

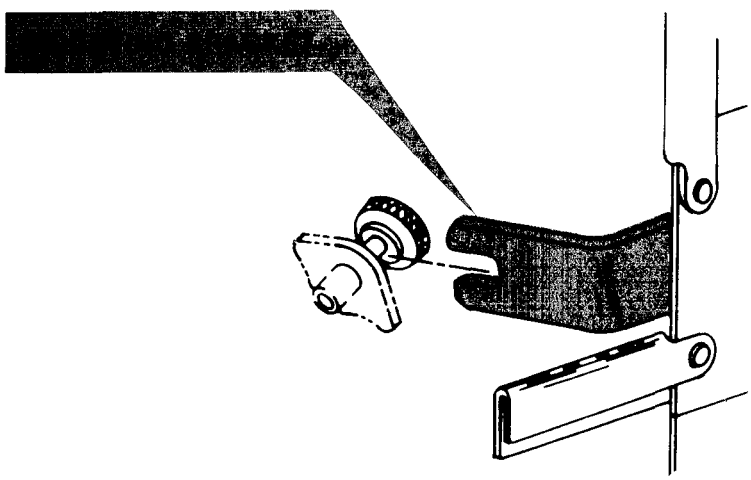

- Place the notched end of the copyholder mounting bracket (center section, left side) between the mounting screw and the washer.
- Secure the copyholder in place by tightening the mounting screw in a clockwise direction.

CAUTION

During operation requiring lowering of the dustcover, remove the copyholder to prevent damage.

c. Paper Supply
Check the paper supply. If it is low, replenish it (para 3-4).

d. Ribbon
Check the ribbon. If it is frayed, dry or torn, replace it (para 3-6).

NOTE

No lubrication is required by the operator.

2-9. OPERATING PROCEDURES

a. Operational States

- Because of the capabilities and limitations of each state, the procedures and system controls available to the operator vary. The internal control switches for each of these states are shown in figure 2-6.
- The combined settings of these controls and switches, in conjunction with the terminal configuration, determine the operating state of the system.

b. After the system has been prepared for starting, the operator must set the terminal's switches and controls. The terminal may be operated in each of the following operating states:

- Receive Only (RO) state.
- Keyboard Send/Receive (KSR) state.
- Intelligent Communications Terminal (ICT) state.
- Each state is explained in table 2-1.

NOTE

The following example, paragraphs c and d below, is for a typical terminal installation. The operator normally receives preset instructions from the unit's Standard Operating Procedure (SOP), or Communications-Electronics Operation Instructions (COEI).

c. In the following example, the terminal is installed in a link having the following requirements:

- Parity: Odd
- State: RO, KSR, or ICT, depending on the requirement.
- Communications interface: LO DATA
- Data format: NRZ
- Transmission speed: 1200 Baud
- Communication clock source: Internal
- Clock edge: Positive (+)
- Figure S/J: Not applicable in ASCII
- Data input: Noninverted data
- No. of stop bits in data format: Two
- Data character set: ASCII

d. With the terminal fully extended on its slides, perform the following initialization setup procedure for the above example.

CAUTION

Be sure the rear connecting cables feed through the terminal rear access door with a minimum of strain.

Set internal switches as follows:

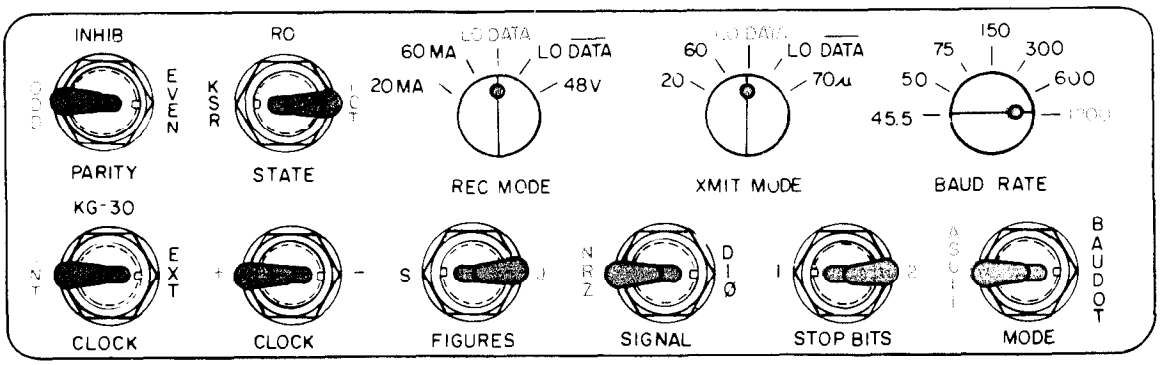

Figure 2-6 INTERNAL CONTROL SWITCHES/SETTINGS

- PARITY to ODD
- STATE to RO, KSR or ICT, depending on the requirement
- REC MODE to LO DATA
- XMIT MODE to LO DATA
- BAUD RATE to 1200
- CLOCK INT/EXT/KG-30 to INT
- CLOCK +/- to (+)

NOTE

FIG S/J is not applicable to ASCII.

- SIGNAL NRZ/D10 to NRZ
- STOP BITS to 2
- ASC1I/BAUDOT MODE to ASCII

Set front panel switches as follows:

- TRANSFER to OFF

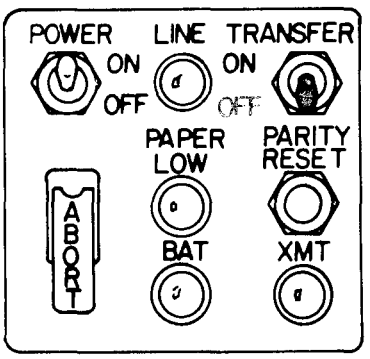

- ILLUM control to BRT
- AUDIO control to MAX

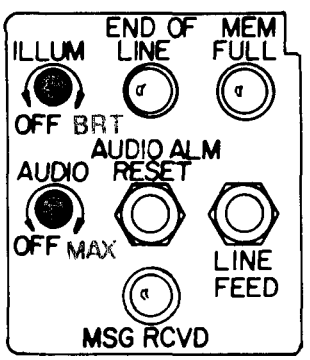

e. During the Operation Validation/ State Determination condition, the system checks and records in the memory the switch settings that were set before power was applied.

CAUTION

Settings changed without turning the POWER OFF may affect the operation of the terminal.

(1) To change the operation of the terminal with the switch settings, POWER must be turned OFF, the switches set, and the POWER turned ON.

(2) Changing the setting of the following switches with power on will affect terminal operation.

- BAUD RATE
- REC MODE
- XMIT MODE
- SELF TEST
- SIGNAL NRZ/D10
- CLOCK INT/EXT/KG-30
- CLOCK +/–

(3) Changing the setting of the following switches with the power on will not affect terminal operation.

- PARITY
- STOP BITS
- ASCII/BAUDOT MODE
- STATE
- FIGURES S/J

(4) By the Operation Validation/State Determination condition message, the operator can verify that the terminal will function in the operational state designated.

(5) The following is an example of an Operation Validation/State Determination condition message when the terminal is in the Baudot mode of operation.

```
BAUDOT
SYSTEM INITIALIZED
SWITCH STATE = ICT
OPERATIONAL STATE = ICT
OPERATING CAPACITY = FULL
MODE = BAUDOT
BAUD RATE = 75
STOP BITS = 1
END OF LINE OPTION = 0D 0D 0A
SPACE OPTION = ON
LINE LENGTH = 80
LINE FEEDS = 1
RECEIVE ENVELOPE OPTION = 56 5A 43 5A 43: 4E 4E 4E 4E

TRANSMIT ENVELOPE OPTION =56 5A 43 5A 43: 4E 4E 4E 4E 7F 7F 7F 7F 7F
                                  7F 7F 7F 7F 7F 7F
BELL OPTION = FIGURES S
```

(6) The following is an example of an Operation Validation/State Determination condition message when the terminal is in the ASCII mode of operation.

ASCII
SYSTEM INITIALIZED
SWITCH STATE = ICT
OPERATIONAL STATE = ICT
OPERATING CAPACITY = FULL
MODE = ASCII
BAUD RATE = 75
STOP BITS = 1
END OF LINE OPTION = 0D 0D 0A
SPACE OPTION = OFF
LINE LENGTH = 80
LINE FEEDS = 1
RECEIVE ENVELOPE OPTION = 56 5A 43 5A 43: 4E 4E 4E 4E
TRANSMIT ENVELOPE OPTION = 56 5A 43 5A 43: 4E 4E 4E 4E 7F 7F 7F 7F 7F 7F 7F 7F 7F 7F 7F
PARITY OPTION = INHIBIT
CAPITAL LETTER OPTION = ON

2-10. RECEIVE ONLY (RO) OPERATING PROCEDURES

Operation in the (RO) state should be performed in the following manner:

- Perform the preliminary starting procedures described in paragraph 2-8.
- Set initial switch settings as described in paragraph 2-9d.
- STATE switch is placed in the RO state position.

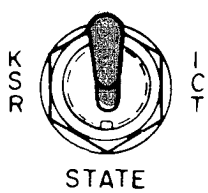

CAUTION

1. If terminal is unbuffered (memory card is not installed), be sure distant station is aware of terminal's lack of message memory.
   - If the distant station is in KSR state, advise the station by telephone to pause one or two seconds between lines of text to allow receiving terminal enough time to print each line and not lose any incoming characters.
   - If distant station is operating in ICT state, request the baud rate be set at not more than 600 baud to prevent loss of text.

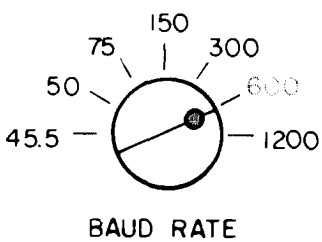

2. If message memory is present (buffered), all received messages are entered to message memory before being printed. This allows the terminal to receive messages at speeds in excess of the printer speed of 600 baud.

- Move the POWER switch to ON position.
- Based on the example given in paragraph 2-9d, the terminal will print out the following Operation Validation/State Determination message for the RO state.

Example: Typical RO Operation Validation/State Determination Printout

```
SYSTEM INITIALIZED
SWITCH STATE - RO
OPERATIONAL STATE - RO
OPERATING CAPACITY - FULL
MODE - ASCII
BAUD RATE -1209
STOP BITS .2
END OF LINE OPTION - OD OD 0A
SPACE OPTION - OFF
LINE LENGTH -80
LINE FEEDS -1
RECEIVE ENVELOPE OPTION = 56 5A 43 5A 43: 4E 4E 4E 4E
TRANSMIT ENVELOPE OPTION = 56 5A 43 5A 43: 4E 4E 4E 4E 7F 7F 7F 7F
                                           7F 7F 7F 7F 7F
PARITY OPTION = ODD
CAPITAL LETTER OPTION = ON
```

CAUTION

If a self-test is to be performed, it should be initiated after the State Determination/Validation State message has been printed out and before message date is stored in memory.

- After completing operations, be sure all printing has stopped, then place the POWER switch in the OFF position.

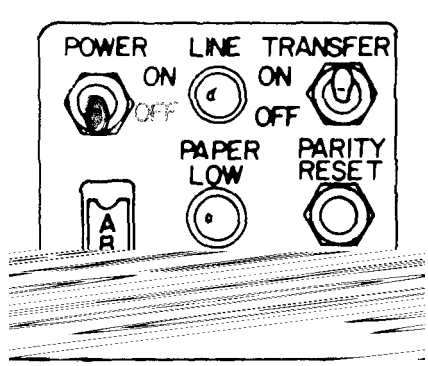

2-11. KEYBOARD SEND/RECEIVE (KSR) OPERATING PROCEDURES

a. The KSR state expands the capability of the terminal from the Receive Only state by making the keyboard available to the operator.

- Messages are composed in conventional manner.
- Terminal provides capability of sending messages one print line at a time.
- Allows composing, editing and review of a full 80-character line of message before transmission.

Data is transmitted by either of the three following procedures:

(1) Initiating a carriage-return.
(2) Moving the print position to the 81st character of the current print line which automatically causes a carriage-return.
(3) Pressing the HLT key.

b. In KSR state, there are three basic keys available to the operator:

- Delete Last Character (DLC) key.
- Delete Last Line (DLL) key.
- Review (REV) key.
- Refer to paragraph 2-3, for a detailed explanation of these keys.

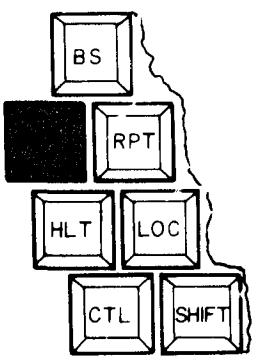

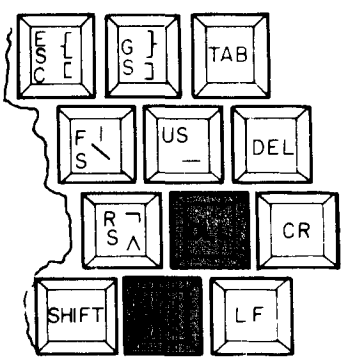

c. Operation in KSR STATE

- Same as in RO state except STATE switch is placed in KSR state position.
- Operation Validation/State Determination will show the switch position.

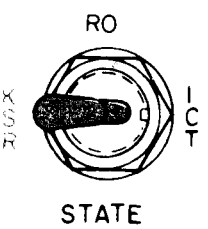

NOTE

Switch settings given in paragraph 2-9d, are used for this example.

Example: Typical KSR Operation Validation/State Determination Printout.

SYSTEM INITIALIZED
SWITCH STATE - KSR
OPERATIONAL STATE - KSR
OPERATING CAPACITY - FULL
MODE - ASCII
BAUD RATE -1200
STOP BITS -2
END OF LINE OPTION - 0D 0D 0A
SPACE OPTION - OFF
LINE LENGTH -80
LINE FEEDS -1
RECEIVE ENVELOPE OPTION = 56 5A 43 5A 43: 4E 4E 4E 4E
TRANSMIT ENVELOPE OPTION = 56 5A 43 5A 43: 4E 4E 4E 4E 7F 7F 7F 7F 7F 7F 7F 7F 7F 7F 7F
PARITY OPTION = ODD
CAPITAL LETTER OPTION = ON

After printout, the terminal is in KSR state and ready for message reception or transmission.

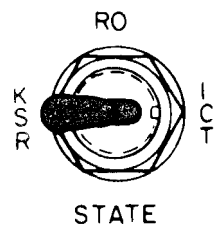

CAUTION

If a self-test is to be performed, it should be initiated after the State Determination/Validation State message has been printed out and before message data is stored in memory.

2-12. INTELLIGENT COMMUNICATIONS TERMINAL (ICT) OPERATING PROCEDURES

a. General

The Intelligent Communications Terminal (ICT) state provides the operator with composing, editing and formatting capabilities. These capabilities are gained by using the System Commands Structure shown below.

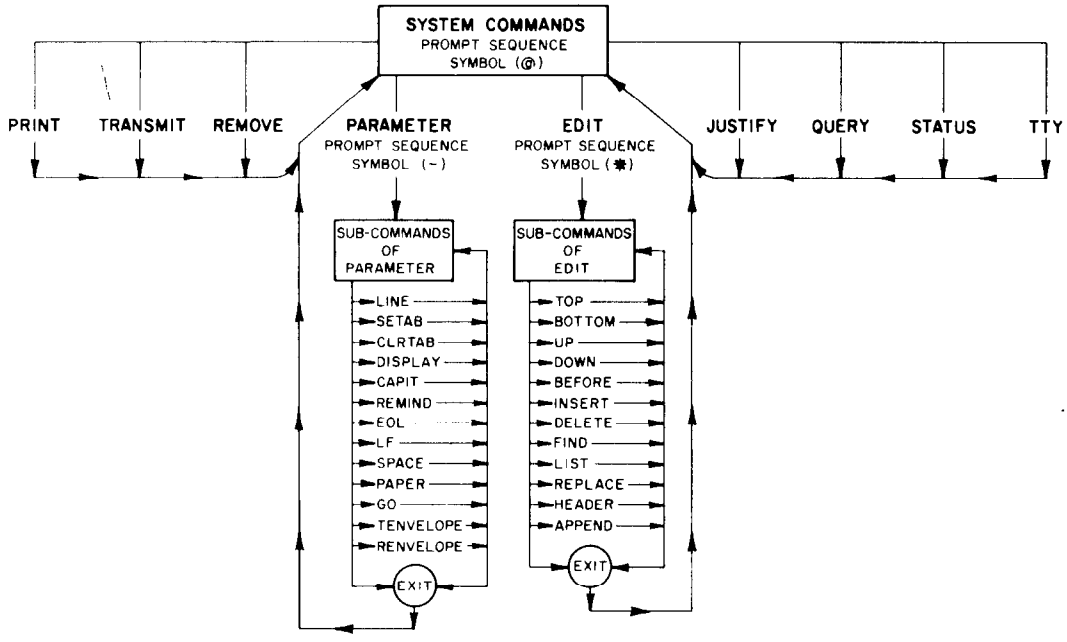

SYSTEM COMMANDS STRUCTURE

(1) Command Levels
Upon entering ICT State, terminal becomes a word processor as well as a message terminal.

(2) As a word processor:
- Allows the operator to enter the text of a message into the terminal message memory.
- Allows the operator to add to, or subtract from (edit) the text without having to prepare a tape or written copy.
- A series of typed commands must be used in order for the terminal to carry out its word processing functions.

(3) System Commands
The series of command levels used in the ICT state are the System Commands. System Commands are used in:
- Editing and sending single line messages without using message memory.
- Entering the PARAMETER and EDIT levels of subcommands for specifying system parameters and for editing.
- Obtaining the status of messages in message memory and the terminal itself.

(4) There are nine System Commands used to achieve these purposes. These commands are described in detail in paragraph 2-14.

b. Operation in ICT state

(1) Same procedures as RO and KSR state, except that the system is powered down.
(2) The STATE switch is placed in the ICT state and powered up.
(3) Operation Validation/State Determination message shows switch positions.
(4) Switch settings given in paragraph 2-9d, are used for this example.

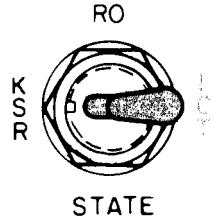

Example: Typical ICT Operation Validation/State Determination Printout.

```
SYSTEM INITIALIZED
SWITCH STATE - ICT
OPERATIONAL STATE - ICT
OPERATING CAPACITY - FULL
MODE - ASCII
BAUD RATE - 1200
STOP BITS -2
END OF LINE OPTION - 0D 0D 0A
SPACE OPTION - OFF
LINE LENGTH - 80
LINE FEEDS -1
RECEIVE ENVELOPE OPTION = 56 5A 43 5A 43: 4E 4E 4E 4E 7F 7F 7F 7F 7F 7F 7F
                          7F 7F 7F 7F 7F
TRANSMIT ENVELOPE OPTION = 56 5A 43 5A 43: 4E 4E 4E 4E 7F 7F 7F 7F 7F 7F
                           7F 7F 7F 7F 7F
PARITY OPTION = ODD
CAPITAL LETTER OPTION = ON
```

In ICT state - Continued

- Message transmission is carried out after message has been composed, edited and reviewed.
- Completed message is sent by using the TRANSMIT system command.

NOTE

In this state, the operator also has the option of sending a single line message (up to 80 characters) as in the KSR state.

- A "home copy" of each message transmitted is printed by the terminal.

NOTE

The memory circuit board must be installed in order for the terminal to function in ICT state.

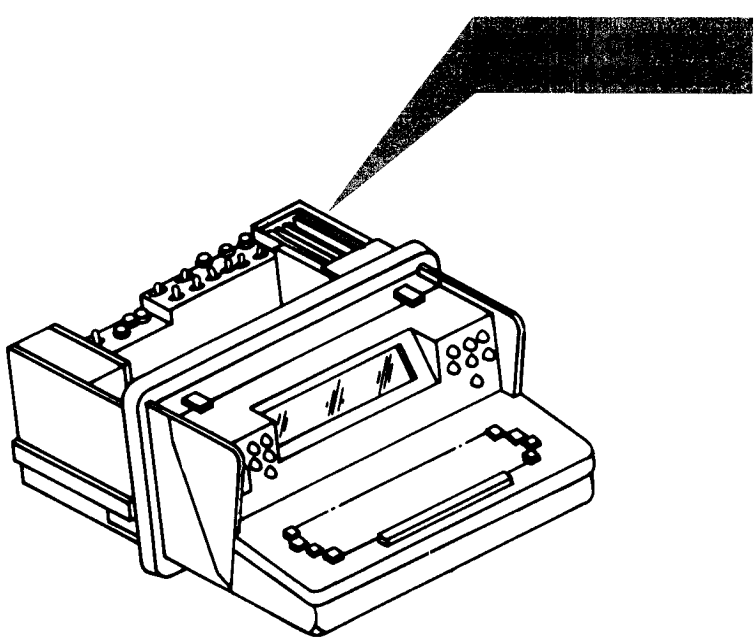

2-13. ICT STATE OPERATING INSTRUCTIONS

This paragraph describes all the operating functions of the terminal in the ICT State which the operator must know in order to understand why the terminal responds to the various operating instructions.

a. System Abbreviations

- Used in this manual to quickly illustrate the operator input or terminal output.
- Meaning of the abbreviations are contained in table 2-5.

Table 2-5. SYSTEM ABBREVIATIONS

Abbreviation	Meaning
CR	Carriage-Return
LF	Line-Feed
CR/LF	Used in this manual to signify a blank line and start of printing at left margin.
b_0	Specifies that no spaces between characters are required, but as many as are desired may be entered optionally.
b_1	Specifies that only one space is required.
b_2	Specifies that at least one space is required but more than one is allowed.
XXXX	A four-digit (decimal) message identification number that may or may not contain leading zeros, and may or may not contain leading blanks. The count starts with 1 and ends with 9999.
XX	A two-digit number that may or may not contain a leading zero or a leading blank (01 or 1 is acceptable).
H H	Two hexadecimal digits representing the ASCII character.
(?)	Indicates that the specification contained within the parentheses is optional.
(+)	Indicates that several options are available one of which must be chosen.
(#)	Indicates that the specification within the parentheses may be invoked a number of times.
Line Pointer	Always points to the first character of the current line.
	NOTE The line pointer is a memory indicator and is not visually displayed on the terminal.
Delimiter	Any ASCII character used as a space or separator. It cannot appear in the same character string for which it is a delimiter.
*	Used in a command to imply option.
Operand	One or more ASCII characters used in a command to amplify instructions.

b. Error Message

(1) The AN/UGC-74A(V)3 has the ability to indicate error or exception condition by printing error messages.

- List of error messages appears in table 2-6 and in Appendix J.
- Messages preceded by an asterisk (*) are printed out in full.
- All others appear only as message error numbers. Table 2-6 must be used to determine the error message text.

(2) The sequence of printing the error message is for the terminal to initiate the following:

- Carriage Return (CR) and Line-Feed (LF).
- One space, a question mark, and a space.
- The error message or error message number, followed by a CR and LF.
  Example: CR/LF b_1? b_1(error message) CR/LF.
- Terminal halts until the error is corrected.

NOTES

(1) For the purpose of simplification, all error messages in this manual are referred to by message number.

(2) Error message does not necessarily mean that an error exists, but could indicate a function has been performed and the error message is printed to alert the operator.

Table 2-2. ERROR messages

Message Number	Message
* (1)	MESSAGE NEVER PRINTED
(2)	MESSAGE NOT FOUND
(3)	MEMORY FILLED
(4)	PHRASE NOT FOUND
(5)	DELIMITER/PHRASE IN ERROR
(6)	LINE TOO LONG
(7)	MESSAGE EMPTY
(8)	EXCESS LINES
(9)	EXCESS TABS
(10)	INVALID OR MISSING OPERAND
*(11)	XMITTER BUSY
(12)	NO SUCH COMMAND
(13)	COMMAND NOT VALID
*(14)	DEGRADED OPERATION
*(15)	IMPROPER SWITCH SETTINGS
(16)	MESSAGE NOT XMITTED
*(17)	PRINTING ABORTED
*(18)	MESSAGE XXXX REMOVED
*(19)	MESSAGE BEING TRANSMITTED
(20)	NO TABS SET
(21)	IMPROPER HEADER FORMAT
(22)	LINE TOO LONG, INPUT IGNORED

* Printed out as messages

c. Basic Command Errors

(1) Errors apply to all system commands.
(2) These errors effect the commands' input format.
(3) If an error is found, the command is not carried out.
(4) The command level of the terminal remains the same and an error message is printed out.
(5) The command level prompt sequence paragraph e below is issued.
(6) The following error messages apply to the System Commands:

- Error message number 2 (Message Not Found) is printed if the requested message is not located in message memory.
- Error message number 10 (Invalid or Missing Operand) is issued when an incorrect or incomplete operand is entered.
- Error message number 12 (No Such Command) prints out when a nonexistent or totally invalid command is issued.
- Error message number 13 (Command Not Valid) prints out when the system is at the wrong command level.

d. Inputting Commands

(1) The system accepts either upper or lower case letters.
(2) Checks commands for validity when the operator executes a CR.
(3) System looks at command and attempts to identify it.
(4) If the system fails, error message number 12 or 13 is printed.
(5) Example: The terminal is operating in the EDIT command level and the operator wishes to input the DOWN subcommand.

- If the operator inputs a space, a "D" and a CR, the system would recognize it as an invalid input because the EDIT subcommands DELETE and DOWN both begin with the letter "D"
- Operator would refer to table 2-9, "Subcommands of EDIT Command"to determine that the shortest acceptable form for the DOWN subcommand is DO.
- Operator then enters a space, DO and CR.
- System recognizes the subcommand being input as DOWN and prepares to carry out the subcommand. Thus, the input required for the command is only that portion of the command needed for the system to determine which is being input. Examples: DE for DELETE and DO for DOWN.

(6) Refer to tables 2-7, 2-8 and 2-9 for the shortest acceptable form for SYSTEM commands and subcommands of the PARAMETER and EDIT commands.

- Of the nine System Commands, only two, the EDIT and PARAMETER have subcommands.

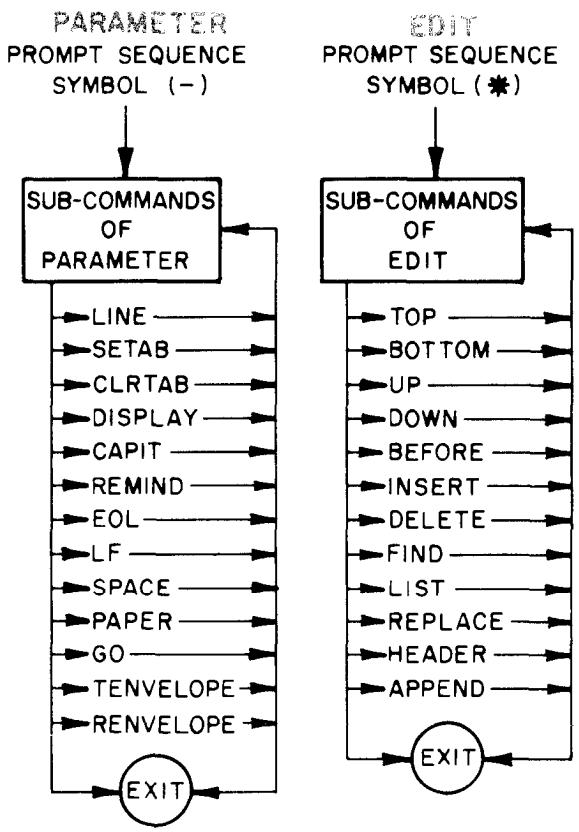

- These two commands each have a different prompt sequence symbol, allowing the operator to determine at which command level the terminal is operating.

(1) The symbols for the various levels are as follows:

- System Command Symbol @.
- EDIT Command Symbol •
- PARAMETER Command Symbol-.

(2) The prompt sequence of the command levels are:

- A carriage-return.
- Line-feed (the prompt sequence).
- Another carriage-return and line-feed.

(3) ABORT Switch

- A System Command prompt sequence (@) is issued if the ABORT switch is operated.

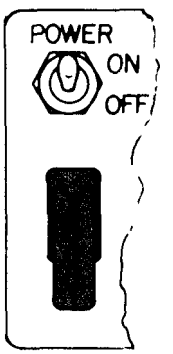

(4) HLT Key

- The prompt sequence for the current command level is issued when the HLT key is operated.
- Upon entering the EXIT subcommand of either PARAMETER or EDIT, the system reverts back into the System Command Level.
- The Systems Command prompt sequence (@) is issued.

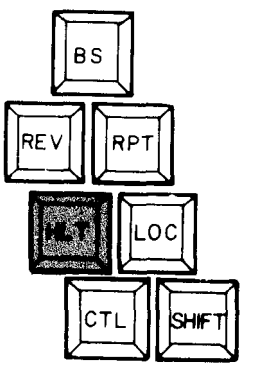

f. Message Numbering

In order for the operator and the terminal to identify one message from another, all messages which enter message memory are assigned a message number. This applies to both send and receive messages.

(1) In the ICT state:

- Message numbering is done by the system using the EDIT Command (para 2-14c, page 2-76).
- Operator enters the EDIT Command.
- System checks the numbers in message memory.
- System assigns the next highest sequence number to the message.

(2) System Initialization at power up:

- The message memory is empty and message numbering is at zero.

NOTE

When powered down, messages in message memory are erased and message numbering is returned to zero.

- Message memory is protected by Battery Backup if the POWER switch remains ON.
- Available message numbers range from 0001 to 9999.
- Identical message numbers will never occur because the system assigns sequential numbers to received messages when they are received, and to composed messages as they are being composed by the operator.

Example: The operator begins operations and composes and transmits two messages:

- System assigns message number 0001 to the first message and 0002 to the second.
- The next received message is assigned message number 0003 and is stored in message memory.
- Each receiving station assigns its own message number to the message, which often differs from the sending station's message number.
- Message tracing is impossible unless the sending station places its message number within the text of the message.

NOTE

The DATE/TIME group of the message header can be used for identification traceability.

(3) Message numbers are assigned and reserved after the front envelope section of a message is recognized by the system.

(4) Receive Message Numbering: Each time a message is received from a distant station, the message is assigned a number by the terminal before the receive message is placed in message memory.

(5) Message Numbering Sequence: Messages entering message memory are assigned numbers on a first-come, first-served basis. There are no numbers set aside specifically for send messages or for receive messages.

g. Receive Message Process.

Receive message process is active in all three operational states (ICT, KSR, RO). However, the receive message process changes in the ICT state.

- Terminal is able to interpret the two receive envelope sequences, beginning and closing, when these sequences are used in the received message.
- Receive envelope beginning and closing sequences can be used in any combination as described below.

Receive message process consists of the following sequence:

(1) When receive envelope beginning sequence is used (see RENVELOPE subcommand, Appendix G)

- Incoming characters are compared and discarded until envelope sequence is recognized.
- Next character is considered first of the message.

(2) When receive envelope beginning sequence is not used:

- First character received is considered first character in the message.
- When in ASCII mode, characters are saved in message memory.

h. Transmit Message Process

(1) The operator can command the terminal to transmit a message stored in message memory.

- Operator starts the transmit message process by entering the System Command TRANSMIT.
- Operator then enters the number assigned to the message, followed by a carriage-return.

NOTE

If the message contains a channel sequence number, refer back to paragraph f.

(2) Terminal begins the transmit message process by determing if the message to be transmitted is actually in message memory. If no such message, terminal responds as follows: CR/LF (space) ERROR MSG. No. & CR/LF

- Otherwise, terminal sends the beginning sequence of the transmit envelope (see TENVELOPE command, Appendix G) followed by the text of the message.

(3) Based upon the position of the MODE Switch:

- Terminal will transmit message characters.
- Also transmits envelope sequence in Baudot or ASCII form.

(4) When a carriage-return is detected in the message:

- Terminal will replace it with the characters of the end-of-line sequence.
- See EOL subcommand, Appendix G.

(5) After the last character of the message text:

- Terminal adds the characters of the closing sequence of the transmit envelope.
- Message is then complete and the process is terminated.

(6) Message being transmitted is automatically printed out (“home copy”) on the terminal:

- If “home copy” is not needed, HLT key is pressed and printer stops printing.
- Terminal continues to send message to distant station(s).

(7) Message transmission can be stopped anytime before a complete message has been sent by:

- Activating the ABORT switch.
- Both transmission and printing stop and the terminal returns to System Command Level.

f. Message Memory

Stores individual messages and repeats them back to the terminal and/or to a distant station. Also, enables operator to add or delete anything from the stored message before transmission.

(1) Without the memory circuit board, terminal operates in either RO or KSR state.

(2) Memory circuit board contains space for 16,000 characters.

(3) Memory is broken into “blocks” of 128 characters each for the purpose of monitoring how much memory is in use at one time.

- These “blocks” are indicated when terminal is in STATUS Command.

(4) When memory is approximately 75% full the MEM FULL lamp on the front panel lights to warn the operator to start emptying some of the stored messages.

(5) Message memory is “temporary memory”, which may be erased by the operator or terminal. Message memory can be erased by the operator as follows:

- Enter the REMOVE System Command.
- Enter a DELETE subcommand in the EDIT System Command.
- Move the POWER switch to OFF position.
- Move the SELF-TEST switch to TEST position.
- Move the STATE switch from one position to another.

(6) Terminal erases message memory when power fails without battery backup.

j. Preemption of Operator

(1) When message memory available becomes three blocks (384 characters) or less due to an incoming message, the following occurs:

- The operator is preempted and the printer is taken over by the system (keyboard is locked out).
- The current line (data or command) is lost.
- Error message No. 3 is printed, followed by 10 line-feeds.

(2) There are two possible conditions which may exist at this point.

(a) Condition one is when there are received messages in message memory. Under this condition the following occurs:

- All received messages and their local numbers are printed out.
- Received messages are then deleted from memory in the order of oldest-highest precedence first.
- These messages are separated by 10 line-feeds.
- As memory blocks (128 bytes) of data are printed, they are released for storage of the incoming message.

(b) Condition two is when there are no received messages in message storage. Under this condition the following occurs:

- The message being received starts printing from the beginning of the message.
- As blocks of data are printed, they are released for storage of the incoming message.

(3) This process (either condition one or condition two) continues until all received messages are printed and deleted from message storage.

(4) The terminal returns control to the operator at the System Command level.

NOTE

This process is only applicable in the ICT operational state.

2-14. THE SYSTEM COMMANDS

NOTE

Refer to SYSTEM ABBREVIATIONS table 2-5, for explanation of abbreviations and symbols used in this SYSTEM COMMANDS paragraph.

a. General

Initially, when the system enters the ICT state, the terminal is at Systems Command level. There are nine System Commands available to the operator as shown below. All nine of the System Commands may be entered from this level.

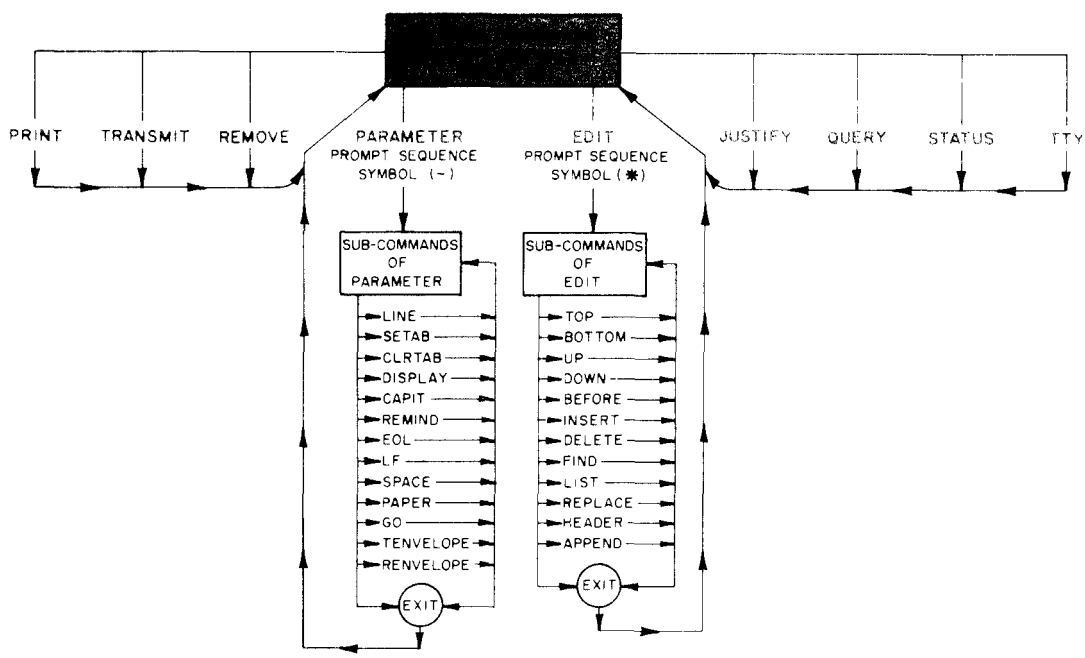

(1) The terminal notifies the operator that the system is in the System Command level and ready to receive commands by issuing the System Command level prompt sequence of CR/2LF @ CR/2LF.

(2) The System Command level is the normal state of the terminal any time the operator is not exercising one of nine system commands.

(3) Except for the System Commands of EDIT and PARAMETER, the System Command level automatically returns after a System Command is accepted and carried out.

(4) Once entered:

- EDIT and PARAMETER commands require the operator to use the EXIT subcommand to return the terminal to the System Command level.
- System must be in System Command level to enter the PARAMETER or EDIT command level.
- This is indicated by the System Command prompt sequence CR/2LF @ CR/2LF being issued.

(5) Prompt Sequences:

- Prompt sequence for the PARAMETER command level is “CR/2LF - CR/2LF”
- Prompt sequence for the EDIT command level is “CR/2LF * CR/2LF”

(6) The following commands in table 2-7 are the top level commands of the system.

- They specify the primary functions of the system.
- A full description of these commands are given in paragraphs b through j below.

NOTE

Refer to Appendix F for operator examples, and use of shortest acceptable forms.

Table 2-7. THE SYSTEM COMMANDS AND THEIR FUNCTIONS

System Command	Shortest acceptable form	Function
PARAMETER	PAR	Allows system parameters to be specified,
EDIT	ED	Allows editing functions to be specified.
PRINT	PR	Allows printing of a specified message(s).
TRANSMIT	TR	Allows transmission of a specified message.
REMOVE	REM	Allows removal of a specified message from message storage.
JUSTIFY	J	Changes the format of a specified message in message memory.
QUERY	Q	Allows the operator to examine the current system status without powering down.
STATUS	ST	Allows the operator to examine the current status of a specified message(s).
TTY	TT	Allows immediate transmission of a single line of input.

b. PARAMETER Command

- Allows the operator to specify system parameters through the use of 14 subcommands (refer to table 2-8).
- Once issued, the system remains in the PARAMETER level until the EXIT subcommand is carried out.
- While at this level, only subcommands of PARAMETER will be carried out.
- Keystroke sequence of the PARAMETER command is "b0 PARAMETER b0 CR"
- Shortest acceptable form of the command is PAR.

Operator action	System response	Comment
Inputs b0, PARAMETER b0, CR	CR/2LF - CR/2LF	Terminal accepts and enters the PARAMETER Command Level.

- Operator is now free to enter any of the 14, subcommands of PARAMETER briefly described in table 2-8.

Table 2-8. SUBCOMMANDS OF THE PARAMETER COMMAND

NOTE

Refer to Appendix G for complete description of these subcommands and use of the shortest acceptable form.

Subcommand	Shortest acceptable form	Function
LINE	LIN	Sets line length.
SETAB	SE	Sets tab position.
CLRTAB	CL	Clears tab position.
DISPLAY	DI	Displays tab position settings.
CAPIT	CA	Sets or resets the capitalize option.
REMIND	REMI	Sets or resets transmission reminder message.
EOL	EO	Sets end-of-line sequence for transmission.
LF	LF	Sets the value for line-feed.
SPACE	SP	Sets or resets the space option.
PAPER	PAPER	Turns the print drum and ribbon-feed off.
GO	GO	Turns the print drum and ribbon feed on.
TENVELOPE	TENV	Sets the envelope for message transmission.
RENVELOPE	RENV	Sets the envelope for message reception.
EXIT	EX	Returns the system to the System Command level.

c. EDIT Command

Used to compose and edit messages through use of 13 subcommands (table 2-9). These subcommands are the only valid instructions until the EXIT subcommand is executed. The keystroke sequence for the EDIT command is either 1 or 2 below:

(1) b0 EDIT (plus the message number) b0 CR- when a specific locally composed message is to be edited.

(2) b0 EDIT b0 CR- when a new message is to be composed.

- Shortest acceptable form of command is ED.

Operator example:

Operator action	System response	Comment
Inputs b0 EDIT b2 123 b0 CR	CR/LF prints MESSAGE NUMBER 123	The first input causes the terminal to respond and call up the designated message 123. The line pointer points to the first line of the message
or		
Inputs b0 EDIT b0	* CR/2LF CRCR/2LF prints MESSAGE NUMBER 6 CR/2LF	The second input places the terminal into the EDIT MODE. The terminal recognizes a new message is being composed and assigns a message number. Message number 6 is used for reference only.
	* CR/2LF	

(3) Messages are normally composed using the INSERT subcommand of EDIT.

- Refer to table 2-9 below for brief explanation of subcommands of the EDIT command.

Table 2-9. SUBCOMMANDS OF EDIT COMMAND

NOTE

Refer to Appendix H for a complete description of these subcommands and use of the shortest acceptable form.

Subcommands	Shortest acceptable form	Function
TOP	TO	Moves the line pointer to the first line of the message.
BOTTOM	BO	Moves the line pointer to the last line of the message.
UP	U	Moves the line pointer up the required number of lines, but not past the first line of the message.
DOWN	DO	Moves the line pointer down the requested number of lines, but not past the last line of the message.
BEFORE	BE	Inserts the operator-entered block-of-text before the line of text as defined by the line pointer.
INSERT	I	Inserts the operator-entered block-of-text after the line of text as defined by the line pointer.
DELETE	DE	Deletes the specified number of lines from the line pointer position.
FIND	F	Specifies a 20-character maximum phrase that is to be located.
LIST	LIS	Prints a requested number of lines, beginning at the line pointer position.
REPLACE	REP	Specifies that a given phrase (1-20 characters) is to be replaced by another phrase (0-40 characters),
HEADER	H	Cues the operator through the beginning procedure of a JANAP 128 PLAIN DRESS message header and trailer and then places this header and trailer around the message.
APPEND	AP	Adds a copy of the designated message to the end of the currently edited message.
EXIT	EX	Returns the System to the System Command Level.

d. PRINT Command

(1) Allows operator to print out messages by message number without erasing them from message memory.

- Operator may also print out all received messages in message memory and erase them.

NOTE

The term "found" refers to the terminals ability to recognize and accept (or reject) an envelope.

(2) When the message number is input and found:

- The subject message is printed.
- The system performs 10 line-feeds.
- At completion of printing, message is not deleted from message memory.

(3) If HLT or ABORT are used to stop printing:

- Error message No. 17 (Printing Aborted) is printed and system returns to System Command level.
- Stored messages are only recorded within the system when completely printed.

(4) If the operator enters an "*" instead of a message number, all messages are printed out.

- Messages are printed in the order received, (first in, first out), by precedence, then erased.
- System finds the number of the oldest, highest precedence message, performs 10 line-feeds, then prints and deletes message.
- This is repeated until all received messages are printed out: System performs 10 line-feeds to complete the command.
- If HLT or ABORT are activated, Error Message No. 17 is printed and the PRINT command is terminated.

(5) Keystroke sequence for PRINT command.

- b_0 PRINT b_2 (+ XXXX, *) b_0 CR.
- Shortest acceptable form of command is PR.

e. TRANSMIT Command

(1) Allows operator to specify message number to be transmitted.

- When number specified is not a composed message in the system, error message No. 2 (message not found) is printed and system returns to System Command level.
- Specific message is marked, transmitted and printed at the same time.

(2) If previous transmission has not been completed:

- Error Message No. 11 (xmitter busy) is printed.
- Command is terminated.

(3) If HLT key stops printing of message:

- Error Message No. 17 is printed.
- Transmission continues until completion.

(4) If ABORT switch stops transmission:

- Message is marked "not transmitted".

(5) If an empty message is specified:

- Error Message No. 7 (message empty) is printed.
- No transmission.

(6) Keystroke sequence for TRANSMIT command is either:

- b_0 TRANSMIT b_2 (message number) b_0 CR".

or:

NOTE

The following keystroke sequence is used with channel sequence number and header.

- b_0 TRANSMIT b_2 (message number) b_2 WITH b_2 NNNb_0 CR".

(7) Shortest acceptable form of command is TR.

f. REMOVE Command

Allows operator to specify number of a message to be removed from message memory.

(1) If message is received and marked as printed:

- It is deleted.
- Error Message No. 18 (message xxx removed) is printed and command is complete.

(2) If message has not been printed:

- Error Message No. 1 (message never printed) is printed.
- Command is complete.

(3) If message is a composed, transmitted message:

- Message is deleted, Error Message No. 18 is printed.
- Command is complete.

(4) If message is marked as being in transmission:

- Error Message No. 19 (message being transmitted) is printed.
- Command is complete.

(5) If message has not been transmitted:

- Error Message No. 16 (message not transmitted) is printed.

(6) If next command is to remove this same message:

- Message is deleted and Error Message No. 18 is printed.

(7) The shortest form of the command is REM.

g. JUSTIFY Command

NOTE

The term "Justify", as used in the printing industry, means to adjust lines to the proper length by spacing.

- Allows the operator to reformat a designated message in message memory to the specified line length. (See PARAMETER subcommands, Appendix G.)

(1) If the designated message is not a message in the system:

- Error Message No. 2 (message not found) is printed.
- The command is terminated.

(2) Upon locating the designated message, the system line justifies the message by performing the following:

- Removing all line-feeds.
- Replacing all carriage-returns with spaces.
- Reforming lines by adding carriage-returns in spaces so that the line lengths are equal to, or less than the selected line lengths.
- Not dividing words.

NOTE

The terminal accepts a space as a character. Therefore, if spaces are randomly placed in the message, the JUSTIFY Command will not eliminate these spaces. The terminal will however, remove all TAB characters.

(3) Excess spaces must be edited out of the message by the operator.

(4) The keystroke sequence for the JUSTIFY Command is "b_0 JUSTIFY b_2 (XXXX) b_0 CR".

h. QUERY Command

- Allows the operator to obtain a printout of the status of the terminal.

(1) The printout consists of the following:

- STATE switch position.
- Actual operational state of the terminal.
- Terminal's operating capacity.
- MODE switch position.
- BAUD RATE switch position.
- STOP-BITS switch position.
- END-OF-LINE option.
- Space option.
- Line-length option.
- Line-feed option.
- Message reception envelope.
- Message transmission envelope.
- Parity option (ASCII mode), or Bell option (Baudot mode).
- Capital letter option.

(2) The keystroke sequence for the QUERY command is "b0 QUERY b0 CR".

(3) The shortest acceptable form of the command is Q.

i. STATUS Command

- Allows the operator to request the status of specified message(s).

(1) If an invalid message number is requested:

- Error Message No. 2 is printed.
- The command is complete.

(2) If no message number is entered:

- The latest received message is assumed to be the message specified.

(3) If the operator wants the status of all messages:

- A n * is entered in the message number position of the input command.
- The status of the received messages are printed in order, first-in, first-out, by precedence.
- The status of the composed message, in order of message number, is printed and the command is complete.

(4) The status of the message(s) is printed and includes the following:

- Message number.
- Type of message (received or composed).
- Number of memory blocks used by the message.
- Whether a received message has been printed; or, whether a composed message has been transmitted.

(5) The precedence characters and codes are shown below:

Character	Precedence	Character printed
Z	FLASH	Z
O	IMMEDIATE	O
P	PRIORITY	P
R	ROUTINE	R
OTHER OR NOT DETERMINABLE		

(6) The precedence is identified in the message by the first character of the second line.

(7) The command is completed when the system prints “CR/2LF MEMORY NNN % FULL CR/2LF & CR/2LF” (where NNN is a three-digit number representing the percent of message memory in use).

(8) The keystroke sequence for the status command is b_0 STATUS b_2 (+ XXXX, *, NULL) b_0 CR.

(9) The shortest acceptable form of the command is ST.

j. TTY Command

- Allows the operator to transmit a one line message. The line-length is set at 80 characters automatically for this command.

(1) When the command is input, the status of the transmitter is checked. If a previously composed message is being transmitted:

- Error Message No. 19 is printed.
- The command is terminated.

(2) If the transmitter is not transmitting, a carriage-return and line-feed is issued, and the operator may enter the line of text.

- The text of the line (80 characters maximum) is composed, and may be edited using the DLC, DLL and REV keys.
- The line of text is transmitted with an end-of-line sequence appended, and in an envelope, when a carriage-return is entered.
- The line is not printed when transmitted.
- c The command is then terminated.

(3) The keystroke sequence for the TTY command is “b_0TTYb_0CR”.

(4) The shortest acceptable form of the command is TT.

2-15. OPERATIONAL TESTS WITH THE DISTANT STATION

When required, or authorized by the station's Standard Operating Procedure (SOP) or Communications-Electronic Operating Instructions (CEOI), the operator will perform an operational test with the distant station(s). If the terminal is operating in the KSR state, Test No. 1 (para a) will be performed. If the terminal is in the ICT state, Test No. 2 (para b) will be performed.

a. Test No. 1 - Terminal in the KSR State

(1) Check the settings of the internal controls on the interface assembly to insure conformance with the station's SOP or CEOI.

(2) Refer to paragraph 2-11, for operating the terminal in the KSR state.

(3) The operator will place the terminal's POWER switch to the ON position.

(4) After the terminal has printed the KSR Operation Validation/State Determination printout, the machine is ready for message reception or transmission.

- The terminal will transmit one line of text (up to 80 characters) after the carriage-return (CR) key or the HLT key is pressed.
- The terminal transmits only upper case letters in the KSR state.
- Editing of one line of text is provided using DLC, DLL and REV keys.

(5) Following the station's SOP or CEOI, the operator will transmit a message to the distant station(s), identifying the operator's station and requesting a reply that the message was properly received.

- Example of operator's message:
  TESTING STATION NO. XXX (enter station's serial number) ACKNOWLEDGE RECEIPT OF THIS MESSAGE AND IF RECEIVED WITHOUT ERRORS.

CAUTION

1. If your terminal is unbuffered (no memory card 3A1A2 installed in the terminal), be sure that the distant station(s) is aware of your lack of message memory. If the distant station(s) is in the KSR state, advise the distant station to pause one or two seconds between lines of text (when transmitting) to allow your terminal enough time to print each line and not lose any incoming characters. If the distant station(s) is in the ICT state, request that the baud rate be set at no more than 600 baud to prevent loss of text.
2. If the message memory card is present in your terminal (buffered), all receive messages are entered into message memory before being printed. This allows the terminal to receive messages at speeds in excess of the printer speed of 600 baud.

(6) The operator will check all received messages to insure that communication with the distant station(s) has been established.

NOTE

In the KSR state, the terminal prints a received line of text after a carriage return is found in the received text, or the 81st character is received, or a 0.5 to 1.5 second time lapse between received characters is detected.

(7) When communication with the distant station(s) has been satisfactorily established, the operator will sign off and place the terminal's POWER switch in the OFF position.

b. Test No. 2 - Terminal in the ICT State

(1) Check the settings of the internal controls on the interface assembly to insure conformance with the station's SOP or CEOI.

(2) Refer to paragraph 2-12, for operating the terminal in the ICT state, TTY System Command.

NOTE

In the TTY command, the operator can transmit only a one line message at a time. The line length is set to 80 characters automatically for this command.

(3) The operator will place the terminal's POWER switch to the ON position.

(4) After the terminal has printed the ICT Operation Validation/State Determination printout, the operator will place the terminal in the TTY command using the keystroke sequence of b₀TTYb₀Cr.

- The terminal will respond with a carriage-return and line-feed; the installer may now enter a line of text.
- The text of the line (80 characters maximum) is composed, and may be edited using the DLC, DLL and REV keys.
- The line of text is transmitted with an end-of-line sequence appended, and in an envelope, when a carriage-return is entered.

NOTE

The line of text is not printed on the terminal when it is transmitted to the distant station(s).

- After the line of text is transmitted, the TTY command is terminated and the terminal returns to the System Command level (@).

(5) Following the station's SOP or CEOI, the operator will transmit a one line message to the distant station(s) (one station at a time), requesting a reply that the message was properly received.

- Example of a one line message:

  TESTING STATION NO. XXX (enter station's serial number) ACKNOWLEDGE RECEIPT OF THIS MESSAGE.

(6) The operator will check all received messages to insure that communication with the distant station(s) is satisfactory.

(7) When communication with the distant station(s) is considered satisfactory, the operator will sign off and place the terminal's POWER switch in the OFF position.

Section IV. OPERATION UNDER UNUSUAL CONDITIONS

2-16. PROTECTIVE MEASURES

The terminal will withstand extremes of heat or cold as listed in paragraph 1-9. When operated within these limitations, moist air, dry heat or cold will not affect the system's performance. The operator will take the following protective measures when these limitations are exceeded:

CAUTION

Insure the combination case is in place before damp cloth is applied.

a. For Intense Heat

During periods of intense heat, a lightly dampened cloth laid over the top and sides of the terminal case will reduce the effect of the heat.

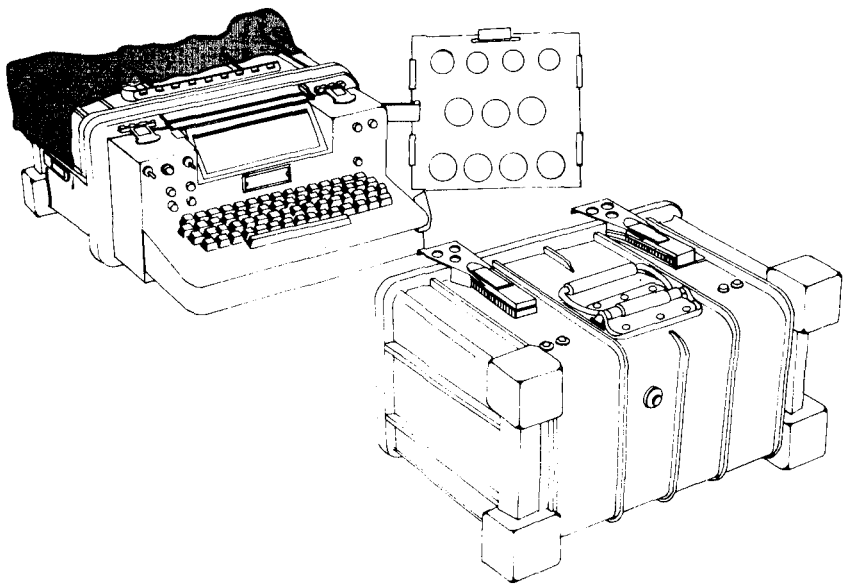

b. For Extreme Cold

During periods of extreme cold, a blanket or other heat retaining material can be placed on the terminal cover to help retain heat generated by the terminal.

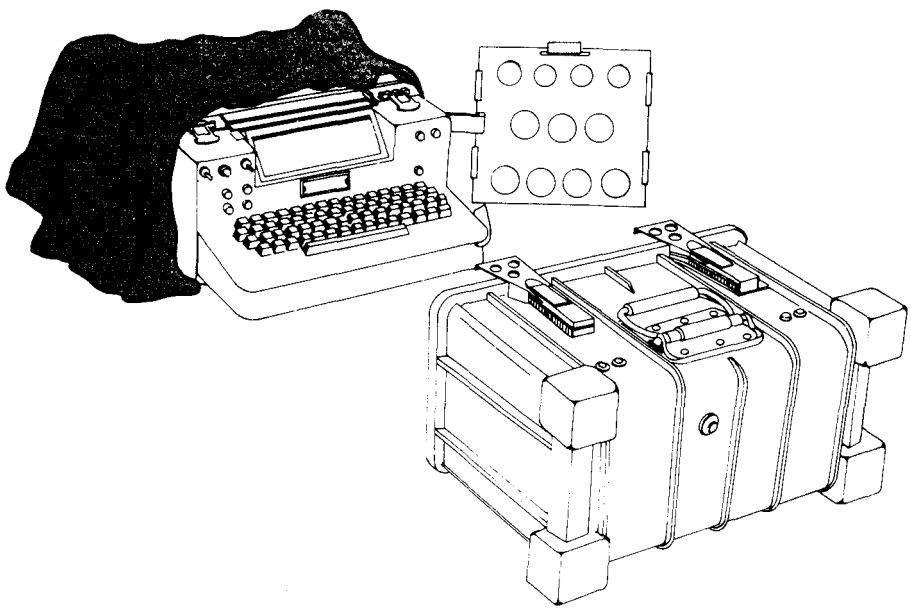

NOTE

When opening dustcover for any reason, be sure to protect the terminal's internal components from corrosive elements such as salt air, dust, sea spray or sand.

c. Protective Covering

Some type of covering, such as a blanket or poncho should be used to prevent entry and cut down on the effects of these corrosive elements.

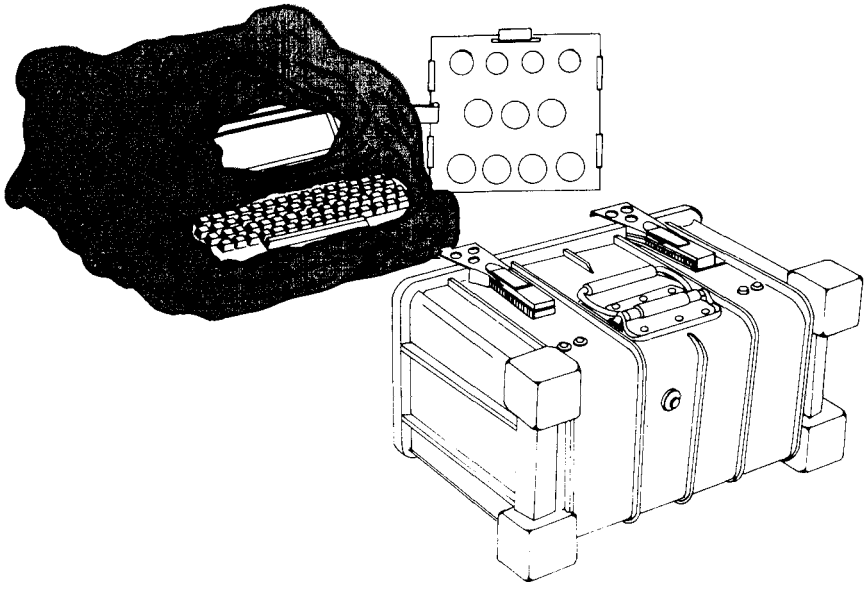

2-17. OPERATION UNDER EMERGENCY CONDITIONS

a. Power Reduction

- A power reduction of 15% (97.75 V) for 115 volts ac operation or (195.5 V) for 230 volts ac operation will not hamper normal terminal operation.

b. Battery Backup Condition

- Occurs when 12 volt dc battery backup power is applied to the terminal.
- When prime power reduction causes the internal +22 to +30 volts dc to drop to less than 12 volts dc, the terminal automatically enters the Battery Backup Condition.

c. Limited Operation

- Occurs when either a message memory or keyboard failure occurs.

d. Message Memory Failure

Eliminates terminal capability to store composed or received messages.

(1) If Self-Test shows memory failure:

- Operator shall power down terminal and switch to KSR state.
- Terminal can be operated in KSR until organizational maintenance can replace the message memory board.

(2) If failure occurs during normal operation:

- Indication is not given until operator tries to retrieve previously stored message.
- Depending upon when and where it was stored, the operator may or may not be able to retrieve the message.
- Operator shall attempt to print all messages stored in memory.
- Operator powers down terminal, then switches into and operates in KSR state until organizational maintenance can correct the problem.

e. Keyboard Failure

Limits terminal's capabilities to RO state only. If Self-Test shows keyboard failure, the operator shall:

(1) Notify organizational maintenance.

(2) Power down the terminal or switch into and operate in the RO state.

NOTE

If unprinted messages are in message memory and cannot afford to be lost by powering down, the operator shall have the sending station transmit messages until message memory becomes full and the terminal is forced into emergency print-out.

- Keyboard failure may be indicated if keyboard is inoperative.
- Problem is not caused by a power failure if copy lamps remain on.

2-18. PREPARATION FOR MOVEMENT

a. Shutdown

Shutdown procedures for the terminal are as follows:

- Print out all messages. Any messages not printed out will be lost once terminal is powered down.
- Verify that all messages have been transmitted.
- Place POWER switch in the OFF position.

b. Securing for Movement

- Remove, fold-up and store the copyholder (reverse copyholder installation, listed in para 2-8b).
- Store the copyholder and screw knob in the front case cover storage compartment.

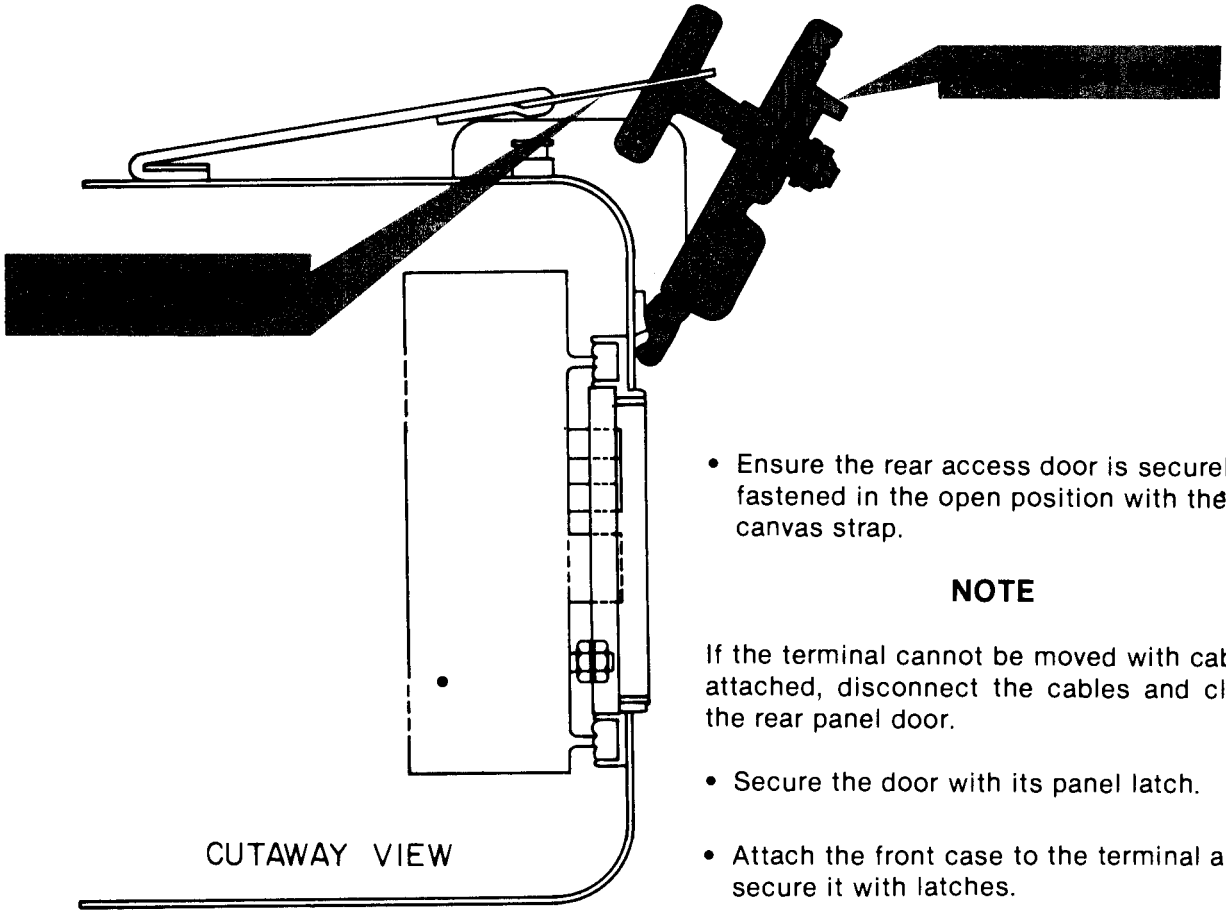

- Ensure the rear access door is securely fastened in the open position with the canvas strap.

NOTE

If the terminal cannot be moved with cables attached, disconnect the cables and close the rear panel door.

- Secure the door with its panel latch.
- Attach the front case to the terminal and secure it with latches.

CHAPTER 3

OPERATOR MAINTENANCE INSTRUCTIONS

PAGE

Backup Battery
Handling and Precautions. 3-26
Preconditioning 3-25
Inking Ribbon
Installing 3-17
Replacement 3-21
Maintenance Procedures 3-6
Replacement
Copy Lamp 3-22
Fuse 3-28
Indicator Lamp, ... 3-23
Roll Paper Loading Procedure. 3-8
Troubleshooting Procedures. 3-2

NOTE

No lubrication is required by the operator.

Section I. TROUBLESHOOTING PROCEDURES

3-1. GENERAL

The troubleshooting procedures that the operator is authorized to perform are listed in table 3-1. These are based on the operator's preventive maintenance checks and services listed in table 2-4.

3-2. TROUBLESHOOTING PROCEDURES

a. Use of Troubleshooting Table (table 3-1).

(1) The table lists the common malfunctions which you may find during the operation or maintenance of the Terminal, Communications AN/UGC-74A(V)3. You should perform the tests/inspections and corrective actions in the order listed.

(2) With the terminal in operation, take note of the apparent system malfunction, then proceed with the following:

- Locate malfunction in Malfunction column of the table.
- Check for probable cause in Test or Inspection column.
- Follow corrective action(s) as provided in the Corrective Action column.

b. This manual cannot list all malfunctions that may occur, nor all tests or inspections and corrective actions. If a malfunction is not listed or is not corrected by listed corrective actions; notify organizational maintenance.

NOTE

Operator will refer to the station's Standard Operating Procedure (SOP) before performing troubleshooting procedures.

Table 3-1 TROUBLESHOOTING

MALFUNCTION

TEST OR INSPECTION

CORRECTIVE ACTION

1. Copy lamp(s) does not light.

Step 1. Check to see if illumination control is set in OFF position.

Turn control knob toward BRIGHT position.

Step 2. Check to see if lamp(s) is defective (para 3-7).

Replace lamp(s); notify organizational maintenance if problem is beyond operator capability.

2. Indicator lamp(s) does not light.

Step 1. Check to see if ILLUM control is in OFF position.

Adjust ILLUM control as required.

Step 2. Check for defective lamp(s).

Perform lamp test by pressing and holding the PARITY RESET switch which will cause a lamp test to be performed on all lamps. Replace lamp(s) (para 3-8).

3. Audible alarm cannot be heard.

Check to see if audio control is in the OFF position.

Adjust audio control towards MAX position. Notify organizational maintenance if alarm still cannot be heard.

4. Print drum does not rotate.

Step 1. Check to see if terminal is low on paper (PAPER LOW lamp is on).

Replace paper if required (para 3-5).

Step 2. Check to see if terminal is in PAPER command.

Enter GO CR. If print drum does not rotate, notify organizational maintenance.

Table 3-1. TROUBLESHOOTING - Continued

MALFUNCTION	TEST OR INSPECTION	CORRECTIVE ACTION
5. Ribbon does not feed.	Check to see if ribbon is improperly installed.	Correct ribbon installation (para 3-6). Notify organizational maintenance if ribbon still does not feed.
6. Line-Feed does not advance paper.	Check to see if paper is properly installed.	Correct improperly installed paper (para 3-5). Notify organizational maintenance if Line-Feed still does not advance paper.
7. Loss of all terminal functions.	Check to see if fuse(s) is defective.	Replace fuse(s) (para 3-11) with spare fuse(s) located below SELF-TEST switch. Reapply power and allow terminal to operate 2 to 3 minutes to be sure malfunction does not reoccur. If terminal does not operate after changing fuses and applying power, remove fuse; replace with the old one and notify organizational maintenance.
8. Dustcover ON/OFF switch does not function,	Check to see if toggle switch is connected to POWER switch linkage actuator arm.	With POWER switch in OFF position, hold toggle switch in down position when closing Keyboard Dustcover Assembly. With POWER switch ON, simply close Keyboard Dustcover Assembly.

c. The following trouble symptoms cannot be corrected by the operator. Notify organizational maintenance for repair.

- Print drum does not rotate; copy and indicator lamps do not light.
- Print drum speed is excessively fast or slow.
- Messages transmitted and/or received are garbled.
- Line lamp is on; audible alarm sounds.
- Keyboard keys are inoperable.
- Every 4th character does not print.
- Print characters are not alined.
- Column not printing.
- Grinding noise.
- Hammers printing improperly.
- Ribbon does not lift or drop.
- Parity lamp does not light.
- Missing or broken parts.

Section II. OPERATOR MAINTENANCE PROCEDURES

3-3. GENERAL

a. In addition to scheduled preventive maintenance checks and services (PMCS) contained in table 2-4, the operator is responsible for performing the maintenance functions in this section. The operator will see the need to perform these maintenance functions when performing PMCS, or as a result of the terminal's warning system.

Example: PAPER-LOW lamp lights, or a portion of the system fails during operation.

b. Paragraphs 3-4 through 3-8 describe the operator's procedures for replacing the following:

- Roll paper
- Ribbon
- Copy lamps
- Indicator lamp

NOTE

If fault if not corrected after performing the maintenance tasks described in this chapter, the operator must notify organizational maintenance.

3-4. PAPER LOADING PROCEDURES (PRELIMINARY)

a. A low paper supply can be indicated by:

- The PAPER LOW lamp lighting.
- A red strip appearing in the center or side of the paper.
- Both warnings are provided before paper runs out.
- Enough time is allowed for printing or received messages.

b. When roll paper supply is allowed to run out:

- PAPER OUT switch will activate automatically.
- Switch operation automatically turns off print drum and ribbon feed.

c. In the ICT state:

- Terminal must be placed in PAPER command.
- Print drum and ribbon feed turn on automatically by inputting GO CR, after paper has been replaced.

d. In RO and KSR states:

- Terminal must be powered down.
- Paper replaced.
- Terminal powered up again.

e. To refill the paper supply, the operator must:

- Obtain a new supply of paper.
- Follow paper loading procedures.

3-5. ROLL PAPER LOADING PROCEDURES

CAUTION

If the terminal is operating in the RO or KSR state with memory board, do not power down terminal or messages stored in memory will be lost. Refer to station SOP for proper changing procedures.

NOTE

If the terminal is operating in ICT state, it must first be placed in the PARAMETER System Command by doing the following:

OPERATOR ACTION	SYSTEM RESPONSE	COMMENTS
(1) Enter b0 PAR b0 CR	CR/LF CR/LF	System enters the Parameter Command level.
(2) Enter b0 PAPER b0 CR	Drum motor stops.	

NOTE

If the terminal is in the RO or KSR state (without memory board), power down terminal, then perform the following procedures starting with extending the terminal from the case in paragraph b.

• Release combination case latches.

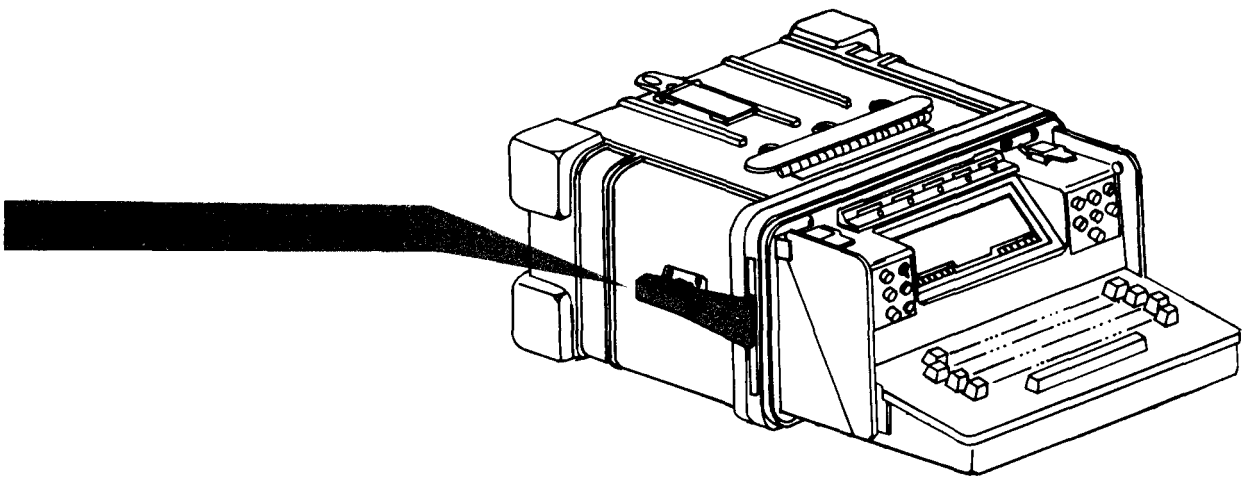

CAUTION

Be careful when extending the terminal from the case to ensure that the cables feed through the terminal's rear access port with a minimum of strain.

- Extend terminal forward until the slides are stopped in the extended position.

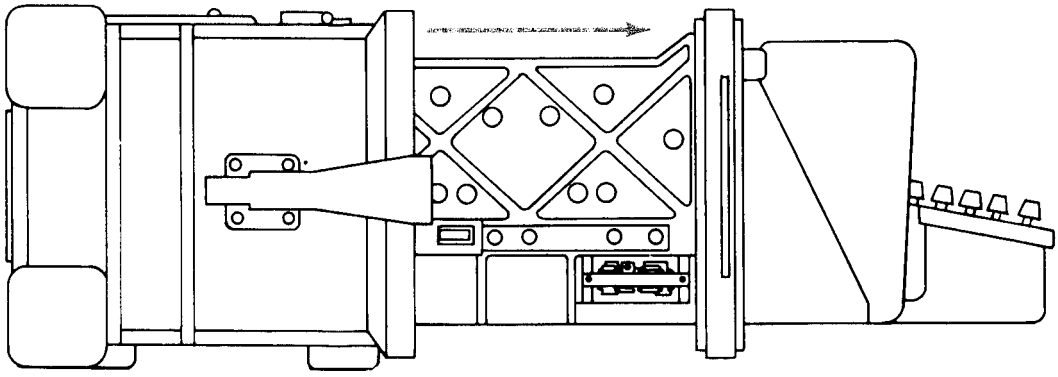

EXTENDED POSITION

- Release the pressure roller tension by lifting pressure roll release lever.
- Move the lever forward from rear hole to front hole.

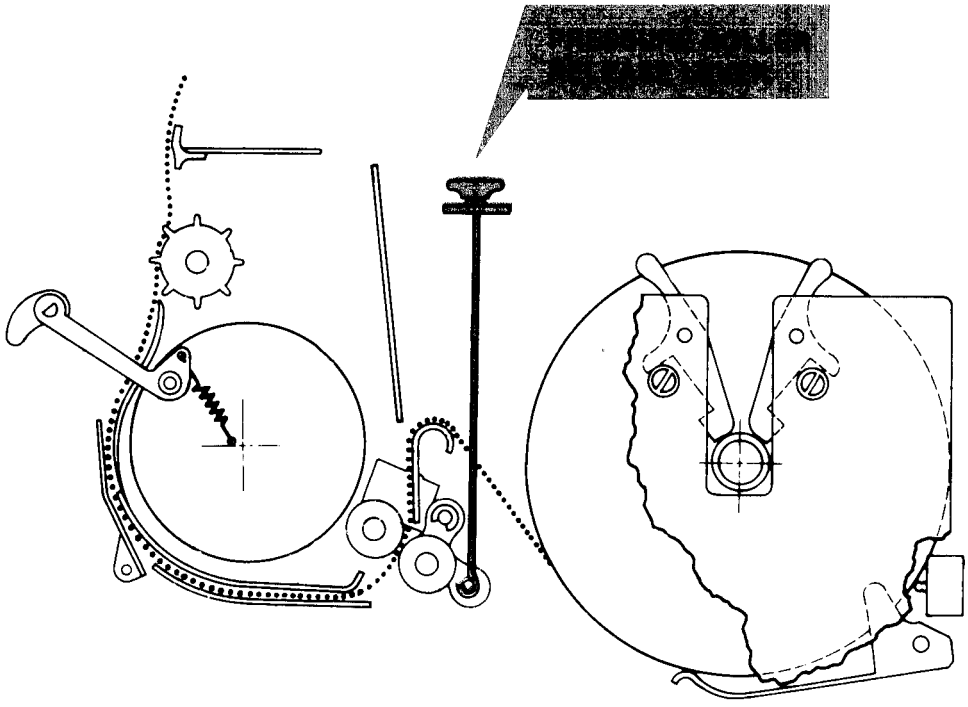

- Release dust cover latches.

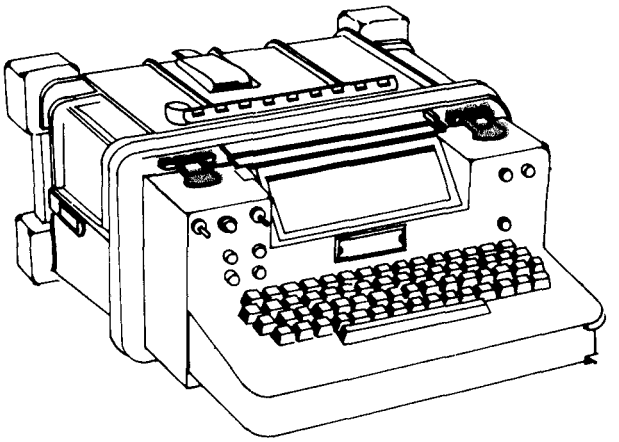

CAUTION

Remove the copyholder, if attached, to prevent damage.

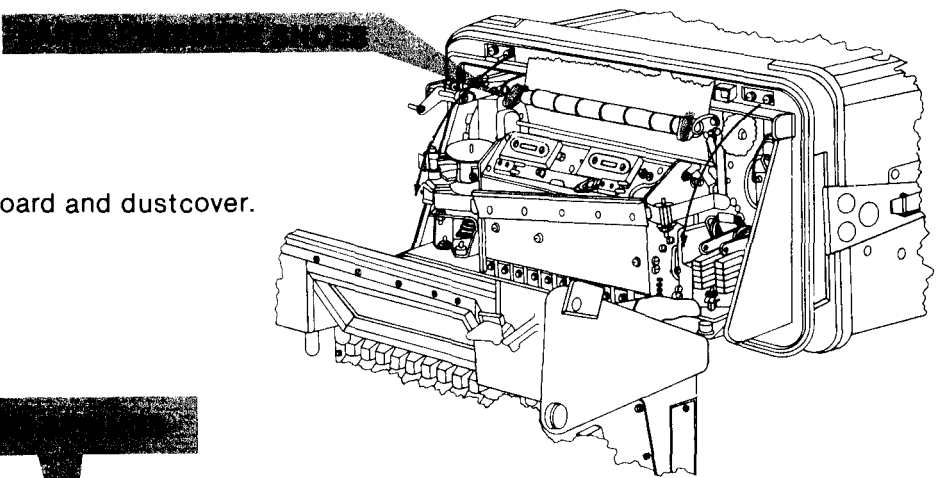

- Gently lower keyboard and dustcover.

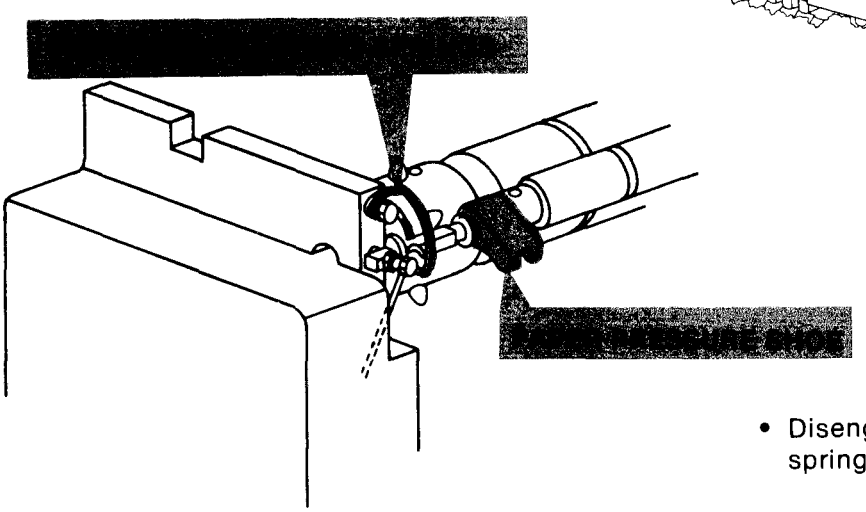

- Disengage shoes from their retaining springs by pulling both shoes forward.

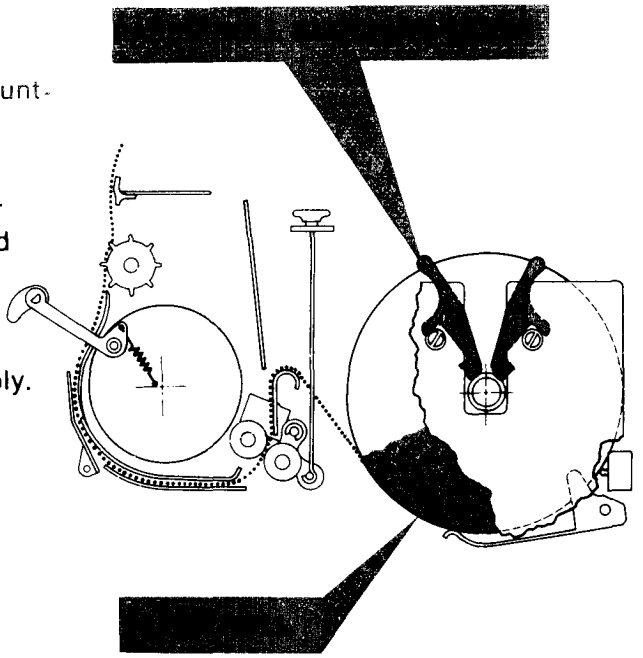

a. To release the paper roll spindle from its mounting bracket:

- Squeeze together the two sets of paper roll blocking levers (located at each end of paper roll).
- Remove paper roll from printer assembly.

b. To remove paper from paper trough:

- Tear paper from the roll.

NOTE

LINE FEED will operate only if terminal was placed in PAPER subcommand at the start of the paper loading procedures.

- Press the LINE FEED switch located on the dustcover.

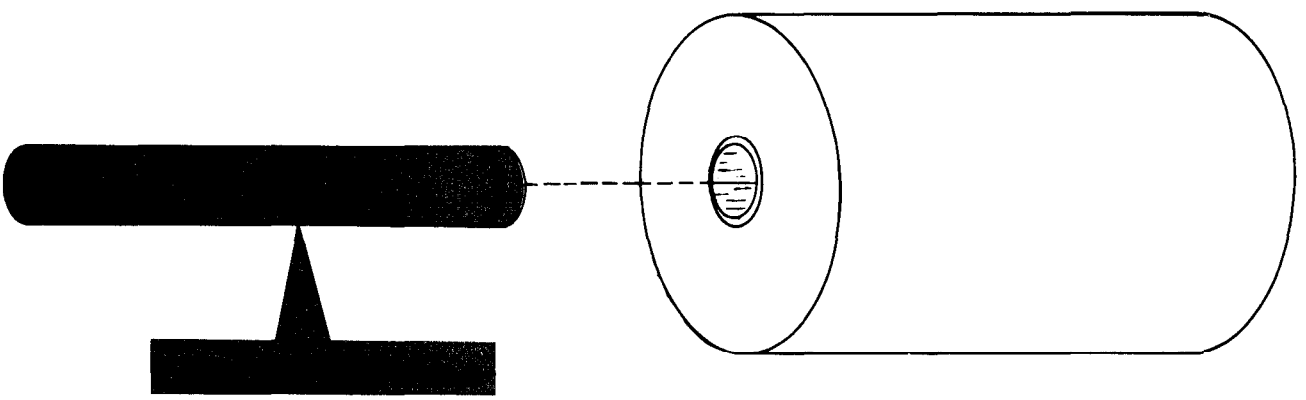

- Remove paper roll spindle tube from the roll paper spindle.
- Discard old paper roll.
- Place new paper roll on the paper roll spindle.
- Unroll approximately 18 inches of paper from the roll.

- Fold left corner down to the right side as shown in illustration,

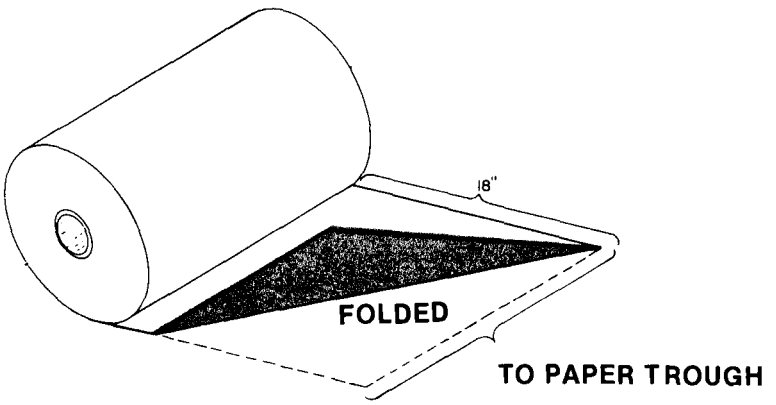

NOTE

The paper must feed off the bottom of the roll. Apply enough downward pressure on the paper roll to lock each end of the paper spindle into its mounting bracket.

- Install the roll in its mounting brackets.

After installing the roll in its mounting brackets:

- Guide paper over the paper tension lever.

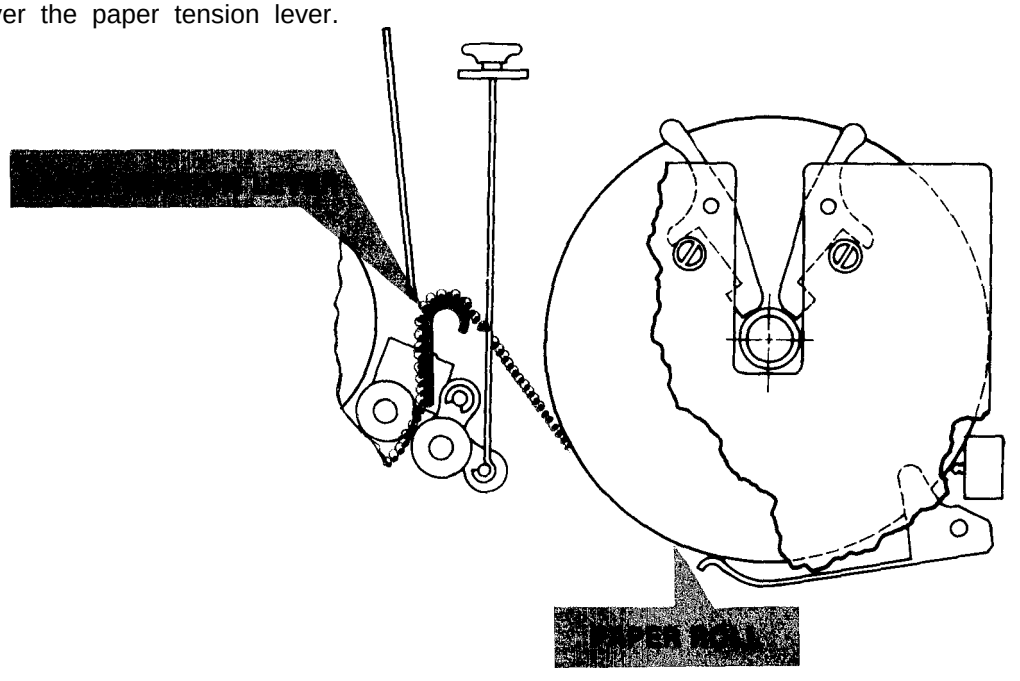

- Push the paper into the paper trough.

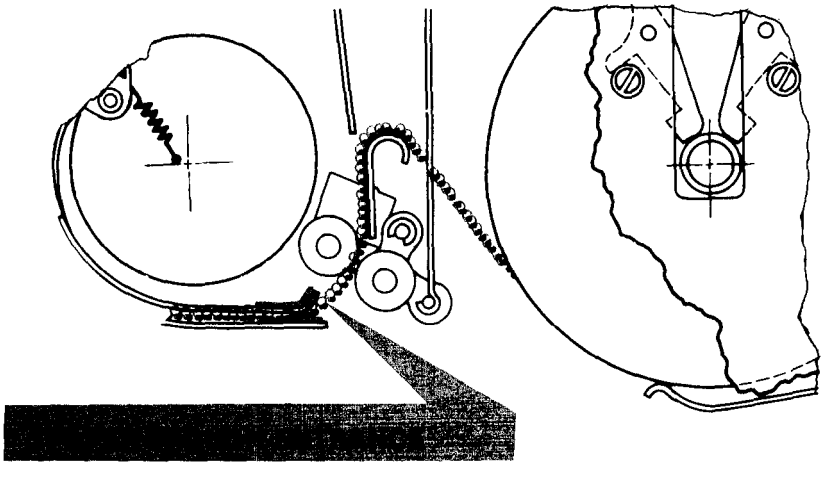

- Lift up pressure roll release lever.
- Move it back to its rear hole position.
- Press LINE FEED switch on front dustcover.
- Allow paper to feed around the print drum.

NOTE

Sprocket drive feeds are installed in terminals serial numbered 00081A through 03500A. The sprockets will be deleted by the manufacturer starting with serial number 03501A.

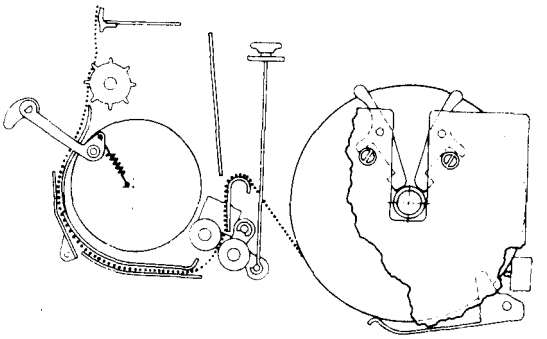

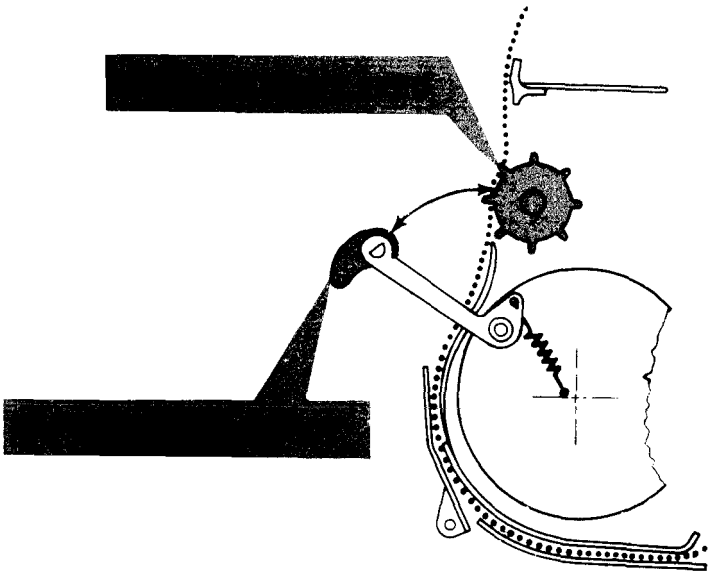

- Guide the paper between the paper pressure shoe and sprocket feed.
- Continue to thread the paper through the paper chute.
- Extend it approximately 12 inches outside the case cover.

- Raise the paper pressure shoe until it engages its wire retaining springs.

CAUTION

When closing the keyboard/Dustcover Assembly, make sure POWER switch is OFF and toggle switch is held down.

- Lift the keyboard and dustcover assembly up to the closed position.
- Secure it in place with the latches.

CAUTION

Be careful when sliding chassis back in case to ensure that the cables feed back through the terminal rear access port with a minimum of strain.

- Slide the chassis back into the case.
- Secure it in place with the latches.

NOTE

At this point, if paper was being changed in KSR or RO, roll paper loading procedures will be completed after performing the following:

- Apply power.
- Perform manual line feed.
- Verify that paper is feeding properly.

NOTE

If loading paper procedures are being performed while system is in ICT state, the following must be done to complete the roll paper loading procedures:

- Perform a manual line feed.
- Verify that paper is feeding properly.
- Input GO CR subcommand.
- Print drum and ribbon-feed will turn on.

3-6. INSTALLING/REPLACING INKING RIBBONS

a. Preliminary Instruction

- Place POWER switch OFF if in RO or KSR.
- Exercise PAPER subcommand if in ICT (para 3-5).

CAUTION

Remove the copyholder (if attached) to prevent damage.

- Release dust cover latches and gently lower keyboard and dustcover.

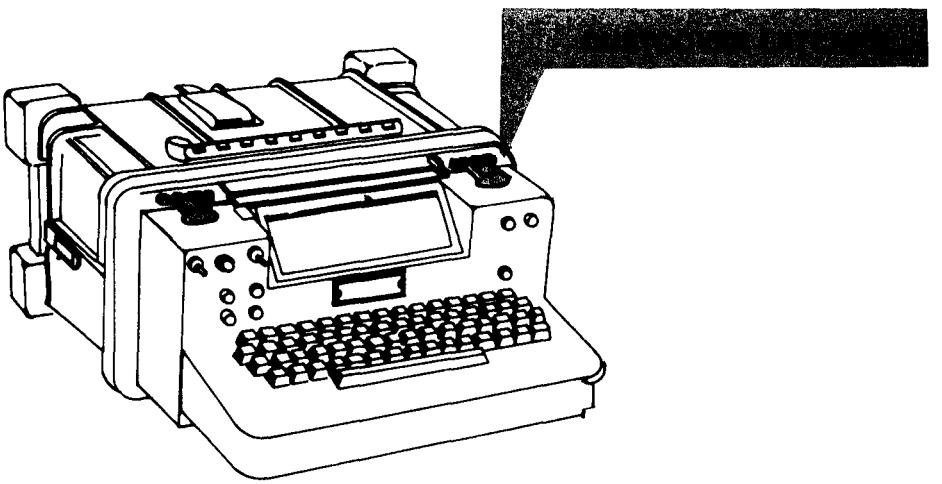

- Locate ribbon assembly (mounted on left side of printer assembly).

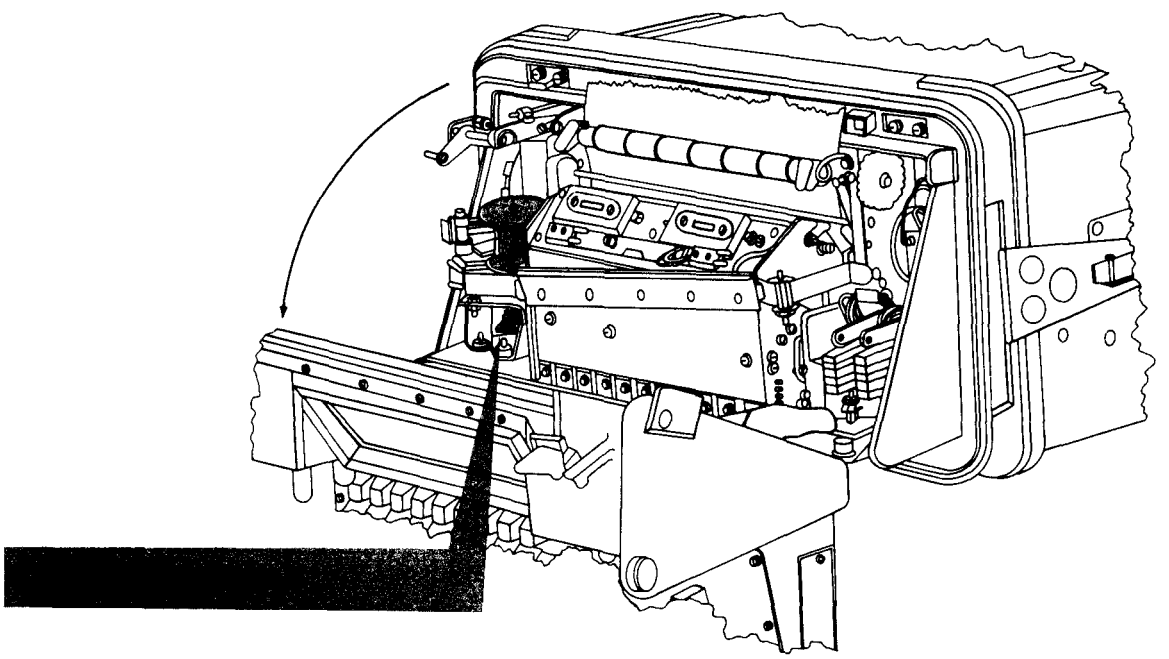

NOTE

Use paragraph b below (Ribbon Installation) if installing a ribbon in a terminal without a ribbon and ribbon spools. Use paragraph c below (Ribbon Replacement) if replacing an unserviceable ribbon.

b. Ribbon Installation

(1) Grasp lower ribbon spool's leader by the tang (metal hook), located at the end of the leader.

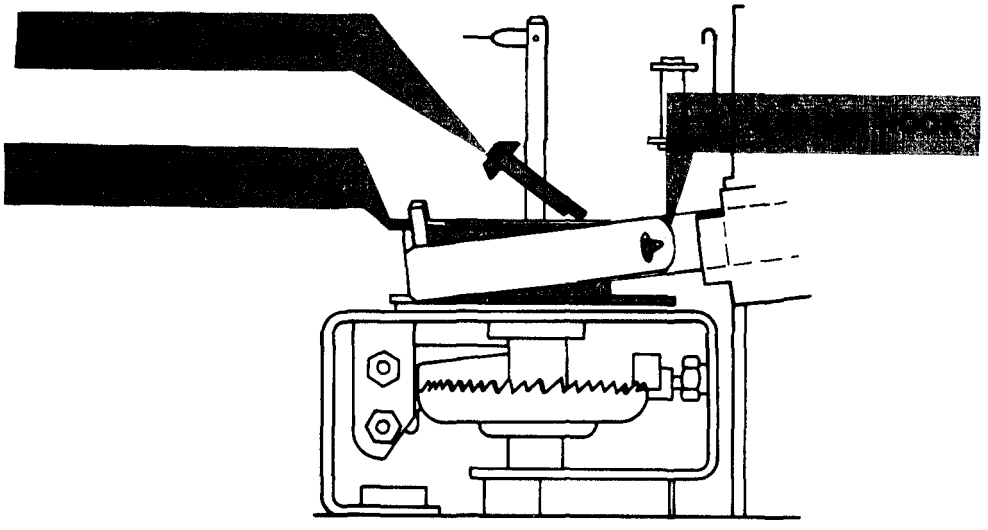

(2) Withdraw approximately 12 inches of leader off the lower spool (or enough to go through the guide trough).

NOTE

If the lower spool does not turn freely, release the driver dog assembly.

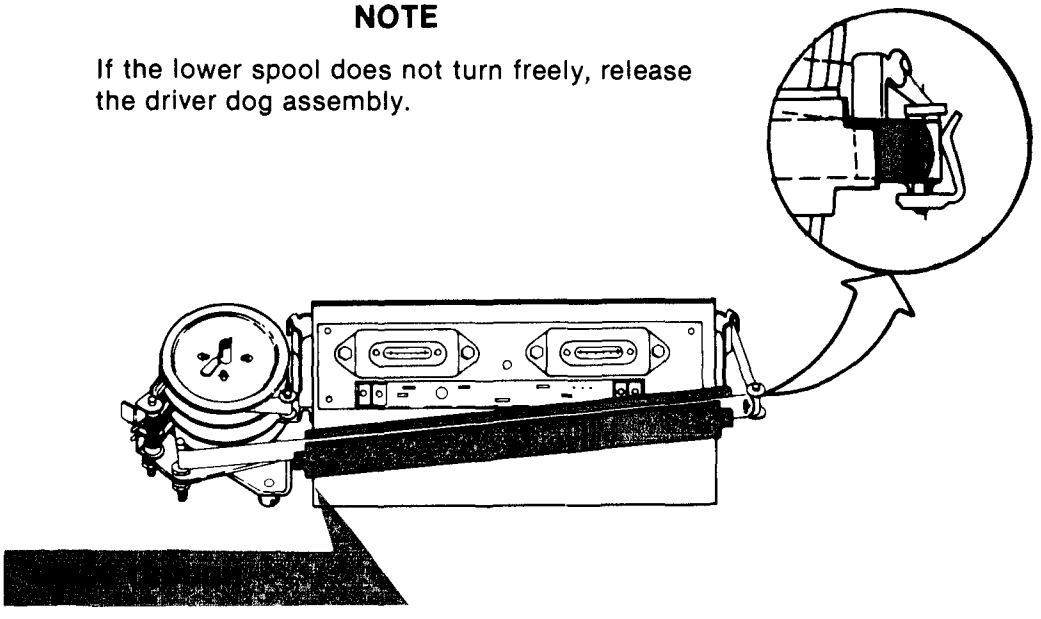

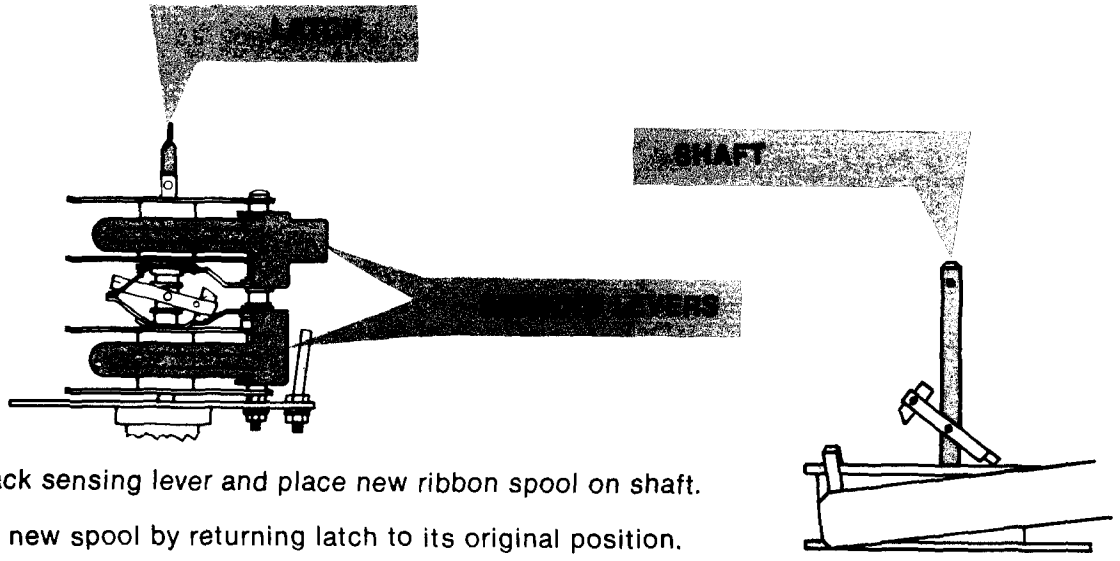

(3) Pull back sensing lever and place new ribbon spool on shaft.

(4) Secure new spool by returning latch to its original position.

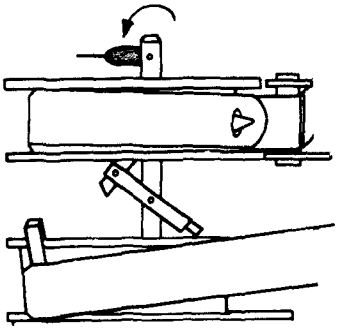

(5) Pull approximately 20 inches of ribbon from the top spool.

NOTE

The ribbon on the top spool should come off in the same direction as the ribbon on the bottom.

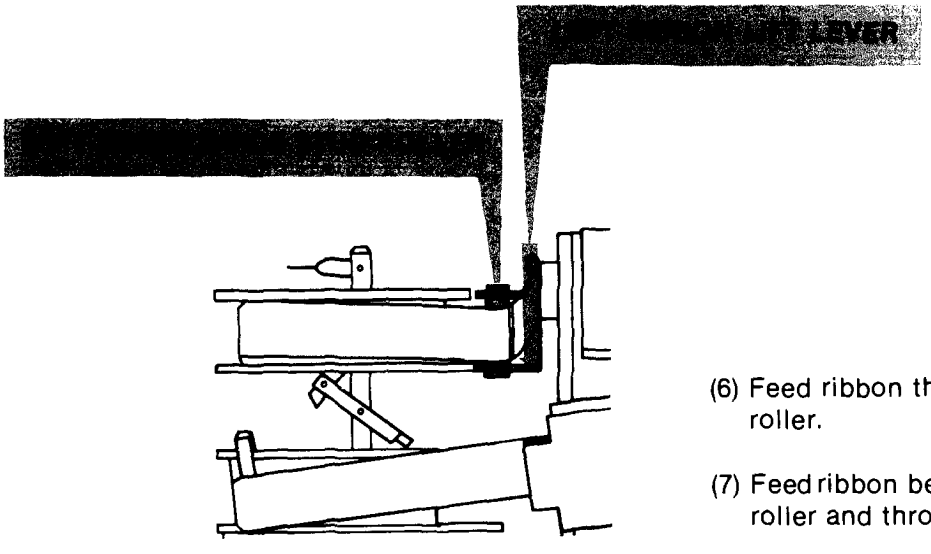

(6) Feed ribbon through the left front guide stud roller.

(7) Feed ribbon behind the left front guide stud roller and through the left ribbon lift lever.

(8) Bring ribbon behind the printer subassembly and through the right ribbon lift lever.

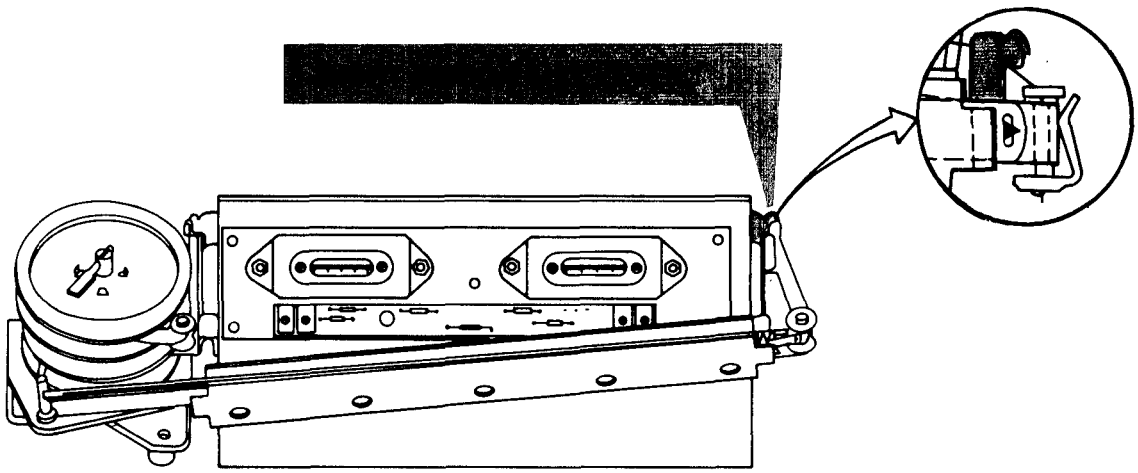

(9) Hook the ribbon to the ribbon leader.

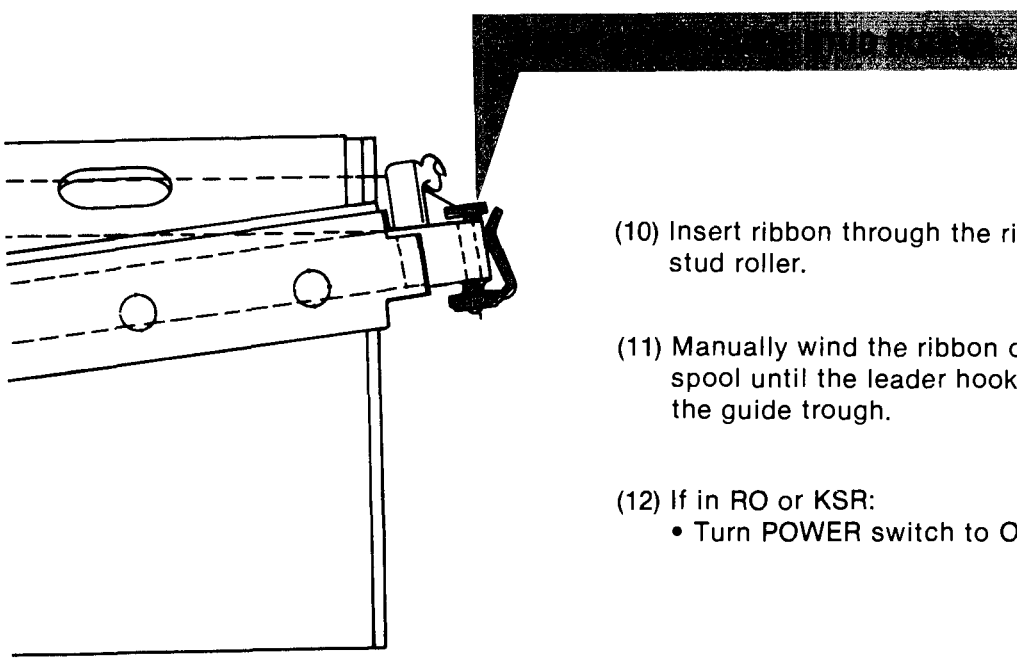

(10) Insert ribbon through the right front guide stud roller.

(11) Manually wind the ribbon on the bottom spool until the leader hook passes through the guide trough.

(12) If in RO or KSR:
- Turn POWER switch to ON position.

(13) If in ICT:
- Execute GO command and observe proper ribbon feed,

CAUTION

When closing the Keyboard/Dustcover Assembly, make sure POWER switch linkage actuator arm is connected (see part 8 of Troubleshooting Table).

(14) Close Dustcover Assembly and secure latches.

c. Ribbon Replacement

- Manually wind all of the unserviceable ribbon onto the upper ribbon spool until the leader hook appears on the right side of the guide trough.

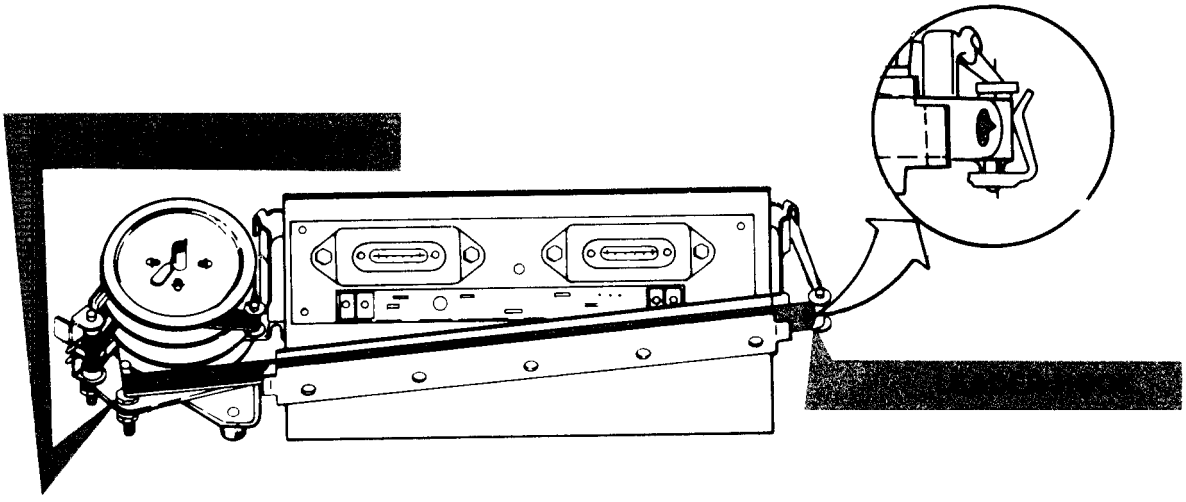

- Disengage the hook from the ribbon.

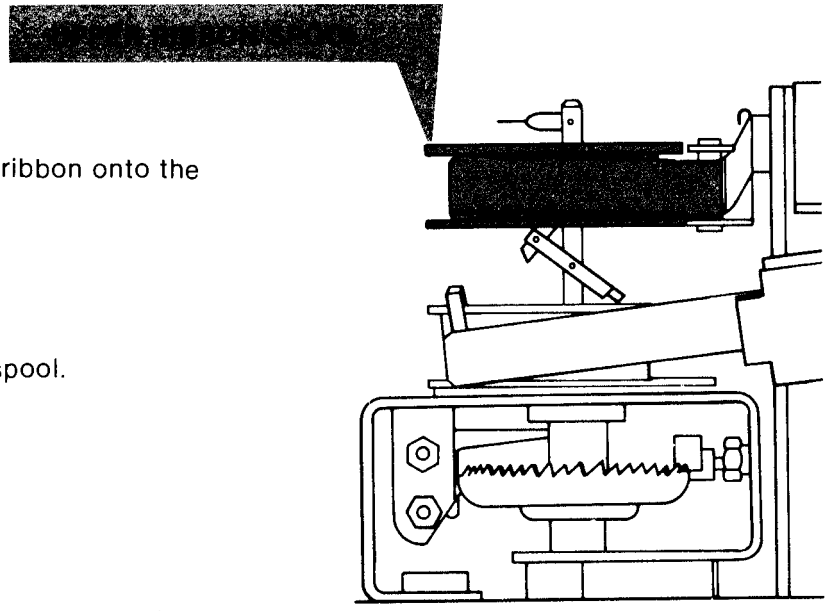

- Wind remaining unserviceable ribbon onto the upper ribbon spool.

- Remove unserviceable ribbon spool.

NOTE

If the end of the new ribbon has an eyelet, remove the eyelet by cutting off that portion of the ribbon that has the eyelet.

- Replace the new ribbon spool using steps (1) through (14), in Ribbon Installation Procedures.

. Check that the ribbon is feeding properly by observing ribbon spool movement.

CAUTION

When closing the Keyboard/Dustcover Assembly make sure POWER switch linkage actuator arm is connected (see part 8 of Troubleshooting Table).

- Close Dustcover Assembly and secure latches.

3-7. COPY LAMP REPLACEMENT

- Turn POWER OFF

CAUTION

Remove the copyholder (if attached) to prevent damage.

- Release and lower dustcover.

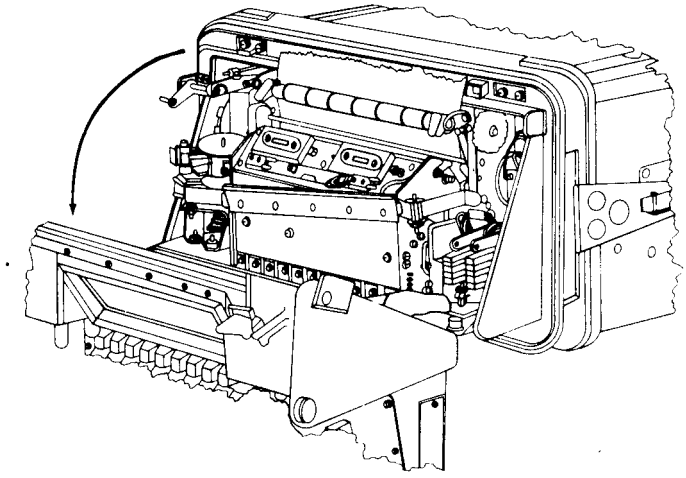

a. To remove lamp

- Press lamp down into socket.
- Rotate lamp one-half turn counterclockwise.
- Remove lamp from holder.

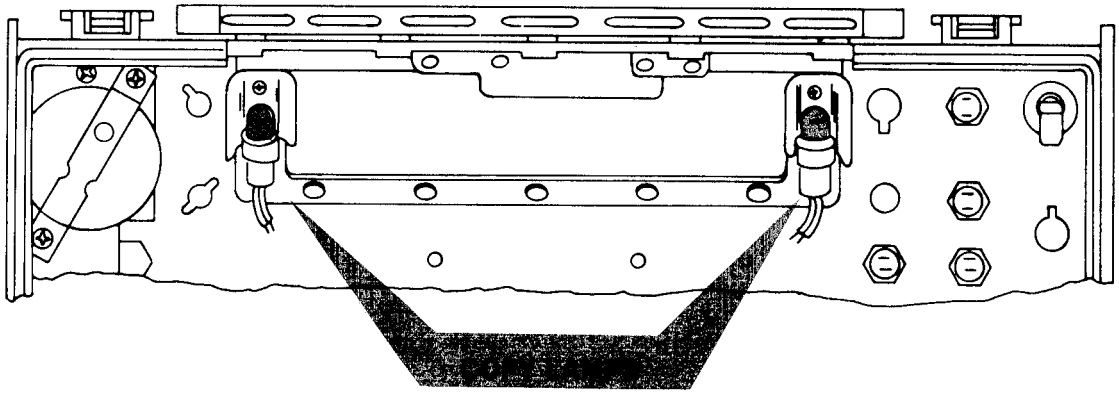

b. To replace lamp.

- Insert new lamp into the holder.
- Press down on lamp and twist clockwise one-half turn.
- Apply power by pressing POWER switch linkage actuator arm down.

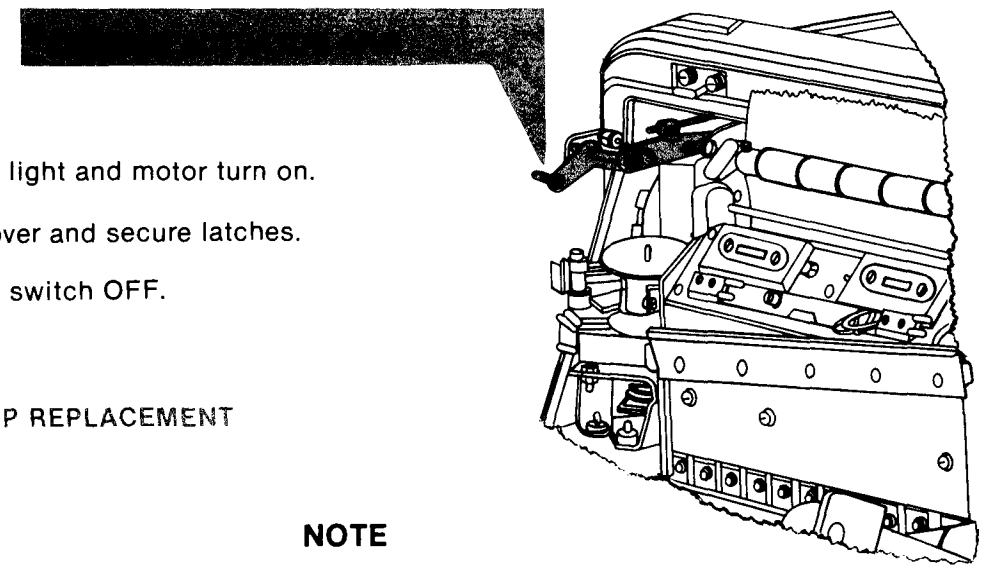

- Lamp should light and motor turn on.
- Close dustcover and secure latches.
- Turn POWER switch OFF.

3-8. INDICATOR LAMP REPLACEMENT

NOTE

Organizational maintenance must be called if the PARITY RESET lamp must be replaced.

- Turn power off.

CAUTION

Do not use pliers or any similar tool to loosen the lamp shield. Damage to the lamp shield will result.

a. To remove lamp.

- Twist lamp shield in a counterclockwise direction.
- Using fingers, unscrew the indicator lamp.

NOTE

As the shield is unscrewed, notice the two rubber O-rings between the shield and dustcover. After unscrewing the lamp shield, these O-rings are to be removed and carefully set aside.

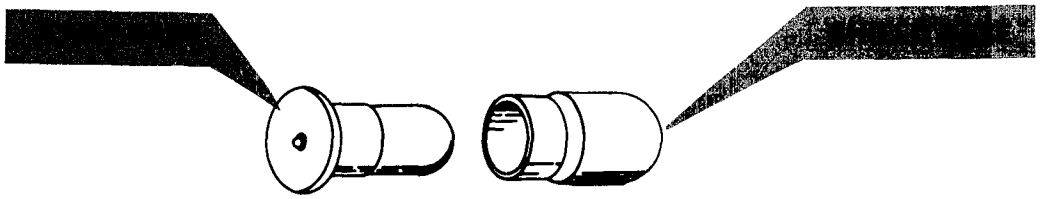

INDICATOR LAMP REPLACEMENT

- Separate the lamp base from the shield base using the thumb nail,
- Pull the lamp from the shield using thumb and forefinger.

b. To replace lamp.

- Insert new lamp into the shield.
- Push the lamp base snug against the shield base.
- Replace O-rings.
- Using a clockwise motion, screw shield base into lamp socket.
- Screw until finger tight.
- Apply power.
- Press PARITY RESET switch to test installed lamp.

3-9. BATTERY BACKUP PERIODIC PRECONDITIONING

WARNING

Refer to WARNING, page A, in the front of this manual. Read the paragraph on LITHIUM ORGANIC BATTERIES for precautions on handling these batteries.

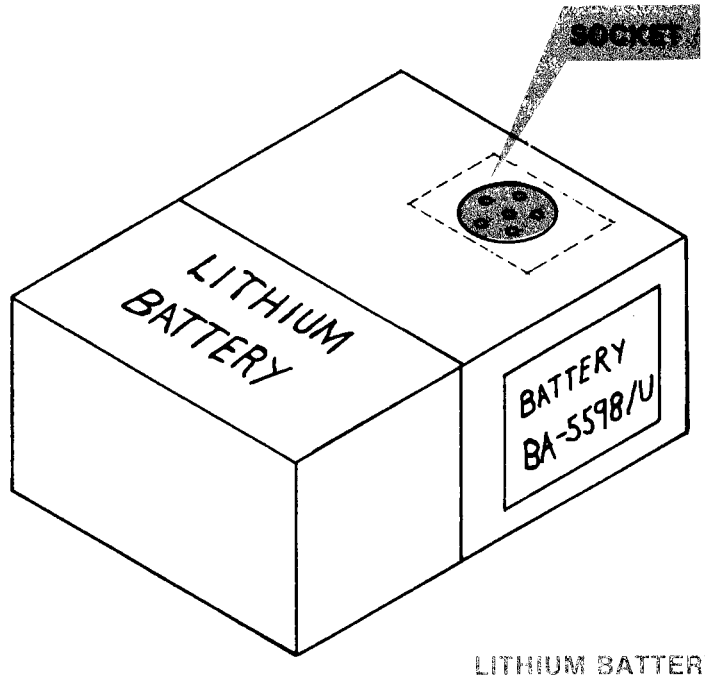

LITHIUM BATTERY

a. If backup battery is connected to the terminal, the operator must perform the following battery preconditioning procedures once every week.

(1) With prime power supplying the terminal, turn POWER switch to the ON position.

(2) Trace and remove AC plug from wall outlet.

NOTE

If terminal is installed in a shelter, refer to station SOP for disconnecting AC power from terminal.

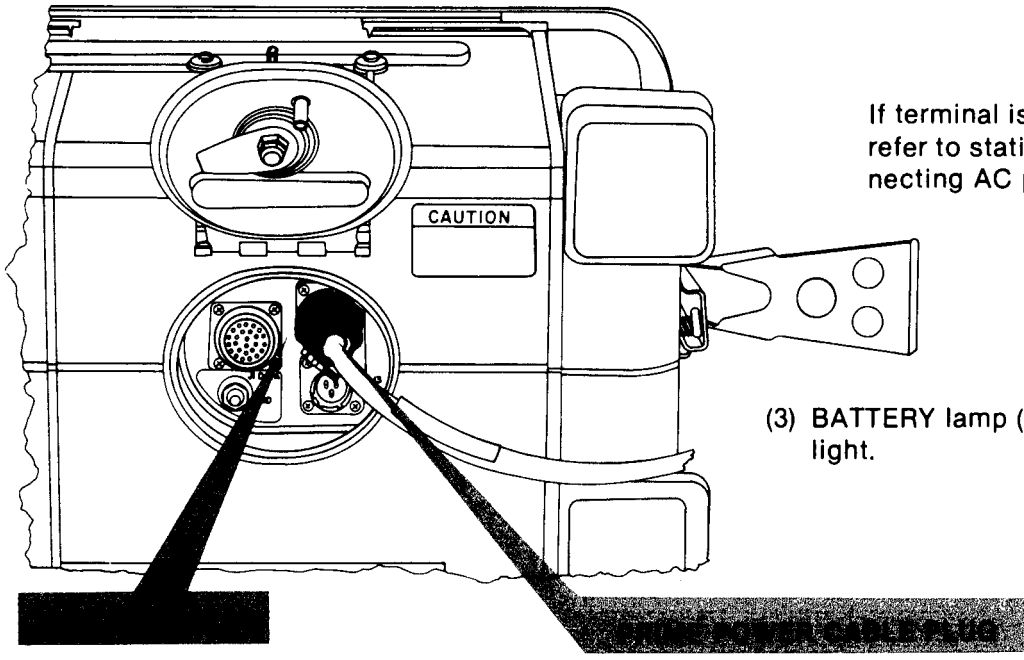

(3) BATTERY lamp (on dustcover) will light.

NOTE

If BATTERY lamp does not light, backup battery is defective and must be replaced by organizational maintenance.

(4) Wait 10 to 15 seconds.

(5) Replace AC power plug in the wall outlet (if installed in shelter, reconnect as directed).

(6) Resume normal operation.

(7) Record time and date that battery was preconditioned on an appropriate maintenance record form.

- Record amount of time backup battery was used due to prime power failure.

b. After battery has been in use for 5½ to 6 hours, call organizational maintenance to replace the battery.

3-10. BACKUP BATTERY HANDLING AND PRECAUTIONS

WARNING

Refer to WARNING, page A, in the front of this manual. Read paragraph on LITHIUM ORGANIC BATTERIES for precautions on handling these batteries.

a. Handling of Battery

(1) Battery BA-5598/U contains pressurized cells similar to aerosol cans. Battery should never be opened, crushed, punctured, disassembled, or otherwise mutilated.

(2) The battery should never be recharged. Such action could lead to venting, rupture, or rupture with fire.

b. Overheating of Battery

(1) TURN OFF the equipment immediately if you detect the battery compartment becoming unduly hot, hear battery cells venting (hissing sound), or smell irritating sulphur dioxide gas.

(2) Carefully remove battery from the equipment, and place away from the area of operation.

- If the battery cannot be removed immediately, leave the area of operation.
- Battery will cool in 30 to 60 minutes.

(3) When cooled, remove battery from equipment and notify organizational maintenance who will replace the battery and dispose of the defective one.

CAUTION

In the event of a fire involving Battery BA-5598/U, extinguish the battery fire with a fine spray of water to flood the burning materials.

3-11. INTERFACE ASSEMBLY FUSE REPLACEMENT

If an interface assembly fuse is suspected of being defective, perform the following procedure to remove and replace the fuse.

- Turn power off.

NOTE

Refer to roll paper loading procedures for terminal extending procedures.

- Fully extend terminal outward on its slides.

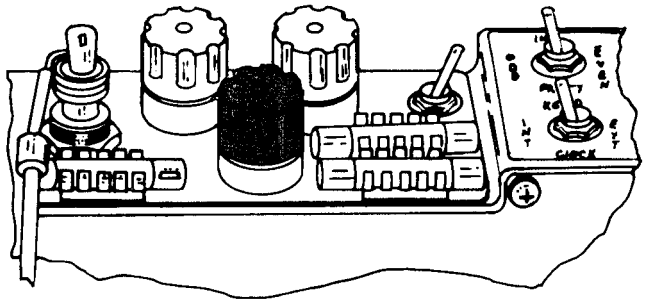

- Push downward and rotate the fuse cap counterclockwise until it is released.
- Pull the cap and fuse from the fuseholder.
- Remove the old fuse.

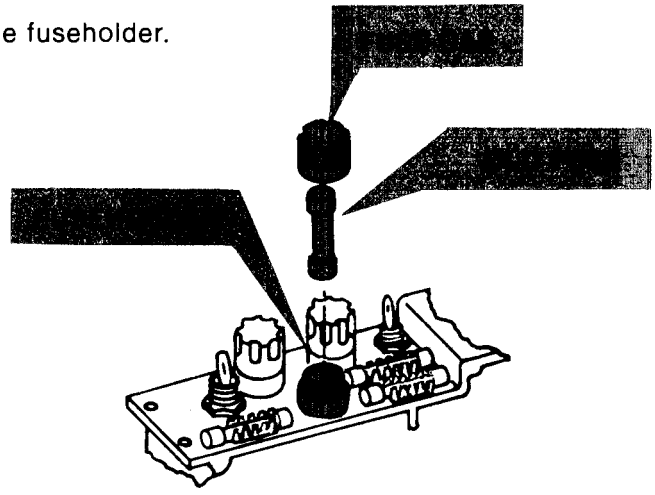

- Insert new fuse(s) into the fuseholder(s).

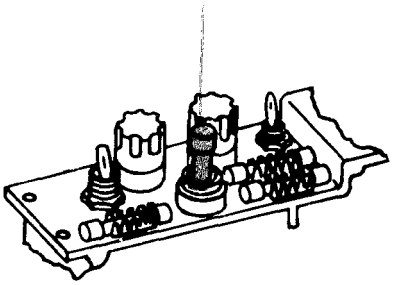

CAUTION

Be sure to install only fuses of the correct current rating (para 2-2) in the fuseholders.

- Replace the fuse cap by pressing it downward and rotating it one-half turn clockwise.

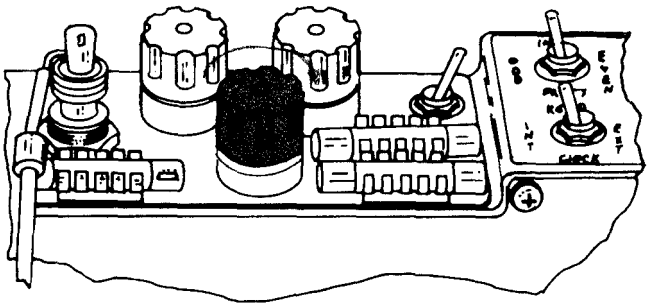

NOTE

If malfunction is not corrected after replacing old fuse(s), remove the new fuses(s) and place it back in the fuse storage clip(s). Place old fuse(s) back in fuseholder and notify higher maintenance. If malfunction is corrected, be sure to replace spare fuse(s) taken from fuse storage clip(s).

- Return the terminal into the combination case and secure it with its latches.
- Apply power.

APPENDIX A
REFERENCES

A-1. SCOPE

This appendix lists all forms, technical manuals and miscellaneous publications referenced in this manual.

A-2. FORMS

Maintenance Report	AFR 66-1
Quality Deficiency Report	SF 368
Recommended Changes to Equipment Technical Manuals	DA Form 2028-2
Standard Army Publications System (STARPUBS): Resupply Guide	DA PAM 310-10-2
Unsatisfactory Equipment	TO-00-35D54

A-3. TECHNICAL MANUALS

Hand Receipt Covering Contents of Components of End Item (COEI), Basic Issue Items (Bll) and Additional Authorization List (AAL) for Terminal, Communications AN/UGC-74A(V)3 (NSN 5815-01-062-8194)	TM 11-5815-602-10-HR
Organizational Maintenance Repair Parts and Special Tools List for Terminal, Communications AN/UGC-74A(V)3 (NSN 5815-01-062-8194)	TM 11-5815-602-20P
The Army Maintenance Management System (TAMMS)	TM 38-750

A-4. MISCELLANEOUS PUBLICATIONS

Automatic Digital Network (AUTODIN) Operating Procedures	JANAP 128(H)
Expendable Items: (Except Medical, Class V, Repair Parts, and Heraldic Items)	CTA 50-970
Federal Supply Code for Manufacturers; United States and Canada-Name to Code and Code to Name..	SB 708-42
Consolidated Index of Army Publications and Blank Forms	DA PAM 310-1
Terminal Communications AN/UGC-74A(V)3 Command Structure References..	GTA 11-10-15

APPENDIX B

COMPONENTS OF END ITEM LIST

Section I. INTRODUCTION

B-1. SCOPE

This appendix lists components of end item and basic issue items for the AN/UGC-74A(V)3 to help you inventory items required for safe and efficient operation.

B-2. GENERAL

The Components of End Item and Basic Issue Items Lists are divided into the following sections.

a. Section II. COMPONENTS OF END ITEM. This listing is for informational purposes only, and is not authority to requisition replacements. These items are part of the end item. They must be with the end item whenever it is issued or transferred between property accounts.

b. Section III. BASIC ISSUE ITEMS. These are the minimum essential items required to place the AN/UGC-74A(V)3 in operation, to operate it, and to perform emergency repairs. Although shipped separately packaged, BII must be with the AN/UGC-74A(V)3 during operation and whenever it is transferred between property accounts. This manual is your authority to request/requisition replacement Bll, based on TOE/MTOE authorization of the end items.

B-3. EXPLANATION OF COLUMNS

The following provides an explanation of columns found in the tabular listings:

a. Column (1) - Illustration Number (Illus Number). This column indicates the number of the illustration in which the item is shown.

b. Column (2) - National Stock Number. Indicates the national stock number assigned to the item and will be used for requisitioning purpcses.

APPENDIX B - Continued

c. Column (3) - Description. Indicates the Federal item name and, if required, a minimum description to identify and locate the item. The last line for each item indicates the Federal Supply Code for Manufacturer (in parentheses) followed by the part number.

d. Column (4) - Unit of Measure (U/M). Indicates the measure used in performing the actual operational/maintenance function. This measure is expressed by a two-character alphabetical abbreviation (e.g., EA, IN, PR).

e. Column (5) - Quantity required (Qty rqr). Indicates the quantity of the item authorized to be used with/on the equipment.

Section II. COMPONENTS OF END ITEM

(1) Illus Number	(2) National Stock Number	(3) Description FSCM and Part Number	Usable On Code	(4) U/M	(5) Qty rqr
	5815-01-070-3802	COVER ASSY: (80063) SM-E-915778		EA	1
	5815-01-087-2130	COPY HOLDER: (80063) SM-D-765130		EA	1

Section III. BASIC ISSUE ITEMS

(1) Illus Number	(2) National Stock Number	(3) Description FSCM and Part Number	Usable On Code	(4) U/M	(5) Qty rqr
	5020-00-529-0618	FUSE, dc, 6¼ Amps; (96906) F03B125V-6¼A	DFX	EA	4
	5920-00-407-7078	FUSE	DFX	EA	1
	5920-00-023-5878	FUSE	DFX	EA	1
	6240-00-155-8736	LAMP, Incandescent (96906) MS25237-327	DFX	EA	1
	6240-00-155-8714	LAMP, Incandescent (96906) MS25231-313	DFX	EA	1
	6210-00-169-6129	LENS	DFX	EA	1
	7530-00-223-7966	PAPER, TTY, Canary (96906) Type 1, CL1, GRB	DFX	EA	1
	7510-01-087-8490	SPOOL ASSY, RIBBON	DFX	EA	5
	or 7510-00-082-2649	SPOOL ASSY, RIBBON	DFX	EA	5
		TECHNICAL MANUAL TM 11-5815-602-10	DFX	EA	1
		TECHNICAL MANUAL TM 11-5815-602-10HR	DFX	EA	1

APPENDIX C

ADDITIONAL AUTHORIZATION LIST

Section I. INTRODUCTION

C-1. SCOPE

This appendix lists additional items authorized to you for the support of the AN/UGC-74A(V)3.

C-2. GENERAL

This list identifies items that do not have to accompany the AN/UGC-74A(V)3 and that do not have to be turned in with it. These items are all authorized to YOU by CTA, MTOE, TDA, or JTA.

C-3. EXPLANATION OF LISTING

National stock numbers, descriptions, and quantities are provided to help you identify and request the additional items you require to support this equipmen?. The items are listed alphabetically by item name under the type document (i.e., CTA, MTOE, TDA, or JTA) which authorizes the item(s) to you.

C-4. SPECIAL INFORMATION

National stock numbers (NSN'S) that are missing from Section II have been applied for and will be added to this TM by future change/revision when they are entered in the Army Master Data File (AMDF). Until the NSN'S are established and published, submit exception requisitions to: Commander US Army Communications-Electronics Command and Fort Monmouth, ATTN: DRSEL-MM, Fort Monmouth, New Jersey 07703 for the part requiried to support your equipment.

Section II. ADDITIONAL AUTHORIZATION LIST

(1) National Stock Number	(2) Description FSCM & Part Number	Usable on Code	(3) U/M	(4) Qty Auth
5995-00-271-9443	Assembly, Cable, Power 24V dc, SM-D-764480, 80063	DFX	EA	1
5995-00-271-9444	115V ac, SM-D-764481, 80063	DFX	EA	1
5995-01-090-1423	Assembly, Cable, Power 230 V ac, SM-D-764482, 80063	DFX	EA	1
5995-01-090-1424	Assembly, Cable, Hi-Level (TH-22) XMIT/RCV SM-D-015889, 80063	DFX	EA	1
5995-01-101-9247	Assembly, Cable, Low-Level XMIT/RCV, SM-D-915896, 80063	DFX	EA	1
5995-01-096-8724	Assembly, Cable, Battery Backup, SM-D-915890, 80063	DFX	EA	1
	Assembly, Cable, Hi-Level XMIT/RCV, SM-D-964513 Used w/TSEC/KW-7	DFX	EA	1
	Assembly, Cable, Low-Level XMIT/RCV, SM-D-964514 Used w/TSEC/KY-57	DFX	EA	1
6135-01-034-2239	Battery BA-5598/U, 800583		EA	1
5995-01-100-6249	Assembly, Cable, Low-Level, Clock XMIT/RCV, SM-D-915897, 80063	RCV	EA	1

APPENDIX D

EXPENDABLE SUPPLIES AND MATERIALS LIST

Section I. INTRODUCTION

D-1. SCOPE

This appendix lists expendable supplies and materials you will need to operate and maintain the AN/UGC-74A(V)3. These items are authorized to you by CTA 50-970, Expendable Items (Except Medical, Class V, Repair Parts, and Heraldic Items).

D-2. EXPLANATION OF COLUMNS

a. Column (1) - Item Number (No.). This number is assigned to the entry in the listing and is referenced in the narrative instructions to identify the material (e.g., "Use cleaning compound, item 5, App. D").

b. Column (2) - Level. This column identifies the lowest level of maintenance that requires the listed item.

C - Operator/Crew

c. Column (3) - National Stock Number. This is the national stock number assigned to the item; use it to request or requisition the item.

d. Column (4) - Description. Indicates the Federal item name and, if required, a description of the item. The last line for each item indicates the Federal Supply Code for Manufacturer (FSCM) in parentheses, followed by the part number.

e. Column (5) - Unit of Measure (U/M). Indicates the measure used in performing the actual maintenance function. This measure is expressed by a two-character alphabetical abbreviation (e.g., EA, IN, PR). If the unit of measure differs from the unit of issue, requisition the lowest unit of issue that will satisfy your requirements.

Section II. EXPENDABLE SUPPLIES AND MATERIALS LIST

(1) ITEM NUMBER	(2) LEVEL	(3) NATIONAL STOCK NUMBER	(4) DESCRIPTION	(5) U/M
1	C	7530-00-223-7966	Paper, Roll, Single Ply	RL
2	C	7530-00-285-5030	Paper, Roll, 3-Ply	RL
3	C	5815-01-087-8490	Ribbon, Teletypewriter, SM-B-765911 (80063)	EA
4	C	7920-00-924-5700	Cloth, Cleaning	EA
5	C	6850-00-105-3084	Trichlorotrifluoroethane, 16 oz can	EA

APPENDIX E

AMERICAN NATIONAL STANDARD CODE FOR INFORMATION INTERCHANGE (ASCII) AND KEYBOARD TABLES

E-1. USE OF ASCII

ASCII is the standard code, using a coded character set consisting of 7-bit coded characters (8 bits including parity check), used for information interchange among data processing systems, data communication systems, and associated equipment. The ASCII set consists of control characters and graphic characters.

- Control Character: A functional character, distinct from a graphic character, which is intended to assist information exchange by controlling or modifying the function of machines or systems. Control characters are intended to be translated by machines rather than human beings; therefore, they are normally non-printing characters.
- Graphic Character: A character intended to be printed or otherwise shown in a legible form.

E-2. ASCII PRINTING SYMBOLS

- 128-Symbol Set. The complete standard set of 128 printing symbols is given in table E-1. There are actually only 127 printing symbols since the space is non-printing.
- 96-Symbol Subset. The standard 96 symbol subset of printing symbols includes the symbols contained in columns 2 through 7 of table E-1 (95 printing symbols plus space). The heart symbol may be printed instead of the symbol for the control characters shown in columns O and 1 in table E-1.
- 64-Symbol Subset. The standard 64 symbol subset of printing symbols for page/printer applications is given in table E-2. The heart symbol (♡) may be printed instead of the symbol for the control characters shown in columns O and 1 in table E-1. The 64-Symbol set is used by the AN/UGC-74A(V)3.

E.3. ASCII CHARACTER REPRESENTATION

a. The standard 7-bit character representation, with b_7, the high-order bit, and b_1, the low-order bit, is shown below. (Order of bit transmission is specified in c below.)

Example: The bit representation for the character “K” (see table E-1) is:
$b_7\ b_6\ b_5\ b_4\ b_3\ b_2\ b_1$
1001011

- The code table position for the character “K” may also be represented by the notation “column 4, row 11” or alternatively as “4/11”.
- The decimal equivalent of the binary number formed by bits b_7, b_6, and b_5, collectively, forms the column number, and the decimal equivalent of the binary number formed by bits b_4, b_3, b_2, and b_1, collectively, forms the row number.

b. For military purposes, a parity bit, b_8 is always added to the standard character. This permits detection of bit groupings which contain single errors.

c. In serial-by-bit transmission, the coded character will be transmitted low order first; i.e., the bits will appear on-line in the order b_1, b_2, b_3, b_4, b_5, b_6, b_7, b_8, (parity).

Table E-1. AMERICAN STANDARD CODE FOR INFORMATION INTERCHANGE

	128-SYMBOL PRINTING SET								
COLUMN →	0	1	2	3	4	5	6	7	ROW ↓
b7 b6 b5	0 0 0	0 0 1	0 1 0	0 1 1	1 0 0	1 0 1	1 1 0	1 1 1	
b4 b3 b2 b1	NON-PRINTING-(4)		96-SYMBOL PRINTING SUBSET						
0 0 0 0	NUL ⧵	DLE ⊖	SP	0	@	P		p	0
0 0 0 1	SOH ⌈	DC1 ⊖	!	1	A	Q	a	q	1
0 0 1 0	STX ⊥	DC2 ⊖	"	2	B	R	b	r	2
0 0 1 1	ETX ⌋	DC3 ⊖	#	3	C	S	c	s	3
0 1 0 0	EOT ⊣	DC4 ⊖	$	4	D	T	d	t	4
0 1 0 1	ENQ ⊹	NAK ⊗	%	5	E	U	e	u	5
0 1 1 0	ACK ⊢	SYN ⊖	&	6	F	V	f	v	6
0 1 1 1	BEL ⎍	ETB ⊕	' (APOS)	7	G	W	g	w	7
1 0 0 0	BS ◁	CAN ⊠	(	8	H	X	h	x	8
1 0 0 1	HT ▷	EM ⊞	)	9	I	Y	i	y	9
1 0 1 0	LF ≡	SUB ⊡	*	:	J	Z	j	z	10
1 0 1 1	VT ∇	ESC ⊟	+	;	K	[	k	{	11
1 1 0 0	FF ⧩	FS ⊞	,	<	L	\	l	¦	12
1 1 0 1	CR «	GS ⊞	-	=	M	]	m	}	13
1 1 1 0	SO ∧	RS ⊡	.	>	N	^	n	~	14
1 1 1 1	SI ∨	US ⊡	/	?	O	_	o	DEL ⊐	15

NOTES

(1) Columns 0 and 1 show the mnemonic abbreviations (see Glossary for definition of Mnemonic), and the printing symbols for the control characters.

(2) The diamond (◇) is printed to show the detection of an error.

(3) The heart(♡) may be printed to show a character of the control character sub-set.

(4) Columns 2 through 7 show non-printing codes in the 96 symbol Printing Subset.

Table E-2. AMERICAN STANDARD CODE FOR INFORMATION INTERCHANGE
64-SYMBOL PAGE PRINTING SUBSET (PAGE PRINTER APPLICATION)

COLUMN →	0	1	2	3	4	5	6	7	
b7 b6 b5	0 0 0	0 0 1	0 1 0	0 1 1	1 0 0	1 0 1	1 1 0	1 1 1	ROW ↓
b4 b3 b2 b1	←NON-PRINTING→		←PRINTING→						
0 0 0 0	NUL ⧵	DLE ⊖	SP	0	@	P	`	p	0
0 0 0 1	SOH ⌈	DC1 ⊙	!	1	A	Q	a	q	1
0 0 1 0	STX ⊥	DC2 ⊕	"	2	B	R	b	r	2
0 0 1 1	ETX ⌋	DC3 ⊗	*	3	C	S	c	s	3
0 1 0 0	EOT ⌊	DC4 ⊘	$	4	D	T	d	t	4
0 1 0 1	ENQ ⌖	NAK ⊗	%	5	E	U	e	u	5
0 1 1 0	ACK ⊢	SYN ⊙	&	6	F	V	f	v	6
0 1 1 1	BEL ⌂	ETB ⊕	' (APOS)	7	G	W	g	w	7
1 0 0 0	BS ◁	CAN ⊠	(	8	H	X	h	x	8
1 0 0 1	HT ▷	EM ⊞	)	9	I	Y	i	y	9
1 0 1 0	LF ≡	SUB ⊡	*	:	J	Z	j	z	10
1 0 1 1	VT ▽	ESC ⊟	+	;	K	[	k	{	11
1 1 0 0	FF ▽̲	FS ⊠	,	<	L	\	l	|	12
1 1 0 1	CR «	GS ⊡	-	=	M	]	m	}	13
1 1 1 0	SO ∧	RS ⊡	.	>	N	^	n	~	14
1 1 1 1	SI ∨	US ⊡	/	?	O	_	o	DEL _	15

The diamond (◇) is printed to indicate the detection of an error.
The heart (♡) may be printed to indicate a character of the control character subset.

E-4. LEGEND OF ASCII CONTROL AND GRAPHIC CHARACTERS

Refer to paragraph E-5,''ASCII Definitions", for a detailed explanation of abbreviations (CC), (FE), and (IS), use of control and graphic characters.

a. Control Characters

NUL	Null
SOH	Start of Heading (CC)
STX	Start of Text (CC)
ETX	End of Text (CC)
EOT	End of Transmission (CC)
ENQ	Enquiry (CC)
ACK	Acknowledge (CC)
BEL	Bell (Audible or attention signal)
BS	Backspace (FE)
HT	Horizontal Tabulation (punched card skip) (FE)
LF	Line Feed (FE)
VT	Vertical Tabulation (FE)
FF	Form Feed (FE)
CR	Carriage Return (FE)
SO	Shift Out
SI	Shift In
DLE	Data Link Escape (CC)
DC1	Device Control 1
DC2	Device Control 2
DC3	Device Control 3
DC4	Device Control 4 (Stop)
NAK	Negative Acknowledge (CC)
SYN	Synchronous Idle (CC)
ETB	End of Transmission Block (CC)
CAN	Cancel
EM	End of Medium
SUB	Substitute
ESC	Escape
FS	File Separator (IS)
GS	Group Separator (IS)
RS	Record Separator (IS)
US	Unit Separator (IS)
DEL	Delete'

Meaning of Control Character Abbreviations

(CC) Communication Control
(FE) Format Effecter
(IS) Information Separator
(¹) In the strict sense, DEL is not a control character.

NOTE

When a control character is represented by a single graphic symbol, the symbol is that which appears to the right of the control abbreviation in table E-1.

b. Graphic Characters

Column/Row	Symbol	Name
2/0	SP	Space (normally non-printing)
2/1	!	Exclamation Point
2/2	"	Quotation Marks[1]
2/3	#	Number Sign[2]
2/4	$	Dollar Sign
2/5	%	Percent
2/6	&	Ampersand
2/7	'	Apostrophe (Closing Single Quotation Mark; Acute Accent[1])
2/8	(	Opening Parenthesis
2/9	)	Closing Parenthesis
2/10	*	Asterisk
2/11	+	Plus
2/12	,	Comma[1]
2/13	—	Hyphen (Minus)
2/14	.	Period (Decimal Point)
2/15	/	Slant
3/10	:	Colon
3/11	;	Semicolon
3/12	<	Less Than
3/13	=	Equals
3/14	>	Greater Than
3/15	?	Question Mark
4/0	@	Commercial At[2]
5/11	[	Opening Bracket[2]
5/12	\	Reverse Slant[2]
5/13	]	Closing Bracket[2]
5/14	^	Circumflex[1,2]
5/15	_	Underline
6/0	`	Grave Accent[1,2] (opening single quotation mark)
7/11	{	Opening Brace[2]
7/12	|	Vertical Line
7/13	}	Closing Brace[2]
7/14	~	Overline[2] (Tilde; General Accent[1])
Not Coded	◊	Diamond
Not Coded	♡	Heart

[1]The symbols in 2/2, 2/7, 2/12, 5/14, 6/0 and 7/14 may be used as distinguishing marks by preceding them with an alphabetic character and BS (Backspace) in that sequence.

[2]These characters should not be used in international interchange without determining that there is aareement between sender and receiver.

E-5. ASCII DEFINITIONS

a. General

(CC)Communication Control: A functional character intended to control or facilitate transmission of information over communication networks.

(FE) Format Effecter: A functional character which controls the layout or positioning of information in printing or display devices.

(IS)Information Separator: A character which is used to separate and qualify information in a logical sense. There is a group of four such characters, which are to be used in order of precedence.

b. Control Characters

NOTE

On the AN/UGC-74A(V)3, the CTL (Control Key) has no effect on the codes generated from keys with no control character groups on the keytops. The two or three character groups shown on the left side of the keytops are control codes entered when the control key is operated regardless of the position of the SHIFT key(s).

NUL The transmitted ASCII control character where all code bits are zero. One of the uses of NUL is to insure acceptance and transmission of the first character of the message header. The header will be preceded by at least 6 NULS and 6 delete functions (with DEL key).

SOH (Start of Heading): A communication control character used at the beginning of a sequence of characters which constitute a machine-sensible address or routing information. Such a sequence is referred to as the “heading”. An STX character has the effect of terminating a heading.

STX(Start of Text): A communication control character which precedes a sequence of characters that is to be treated as a complete group and transmitted through to the final destination. Such a sequence is referred to as “text”. STX may be used to terminate a sequence of characters started by SOH.

ETX(End of Text): A communication control character used to terminate a sequence of characters started with STX and transmitted as a complete group.

EOT(End of Transmission): A communication control character, used to indicate the conclusion of a transmission, which may have contained one or more texts and any associated headings.

ENQ(Enquiry): A communication control character used in data communication systems as a request for a response from a remote station. It may be used as a “Who Are You” (WRU) to obtain identification, or may be used to obtain station status. or both.

ACK(Acknowledge): A communication control character transmitted by a receiver as an affirmative response to a sender.

BEL: A character for use when there is a need to call for human attention. It may control alarm or attention devices.

BS (Backspace): A format effecter which controls the movement of the printing position one printing space backward on the same printing line (applicable also to visual display devices).

LF (Line Feed): A format effecter which controls the movement of the printing position to the next printing line (applicable also to visual display devices). Where appropriate, this character may have the meaning “New Line” (N L), a format effecter which controls the movement of the printing point to the first printing position on the next printing line. Use of this convention requires agreement between sender and receiver of data. (So long as the current operating procedure of ending (or beginning) a line with CR-CR-LF is observed, no operational problem arises from interconnecting “NL” and “Non-NL” machines.)

VT (Vertical Tabulation): A format effecter which controls the movement of the printing position to the next in a series of predetermined printing lines (applicable also to visual display devices).

FF (Form Feed): A format effecter which controls the movement of the printing position to the first predetermined printing line on the next form or page (applicable also to visual display devices).

CR (Carriage Return): A format effecter which controls the movement of the printing position to the first printing position on the same printing line (applicable also to visual display devices).

SO (Shift Out): A control character indicating that the code combinations which follow shall be interpreted as outside of the character set of the standard code table until a Shift In Character(s) is (are) reached.

Sl (Shift In): A control character indicating that the code combinations which follow shall be interpreted according to the standard code table.

DLE (Data Link Escape): A communication control character which will change the meaning of a limited number of succession following characters. It is used exclusively to provide supplementary controls in data communication networks. DLE is usually terminated by a Shift In character(s).

DC1, DC2, DC3, DC4 (Device controls): Characters for the control of ancillary devices associated with data processing or telecommunication systems; more especially switching devices “on” or “off”. (If a single “stop” control is required to interrupt or turn off ancillary devices, DC4 is the preferred assignment.)

NAK (Negative Acknowledge): A communication control character transmitted by a receiver as a negative response to the sender.

SYN (Synchronous Idle): A communication control character used by a synchronous transmission system in the absence of any other character to provide a signal from which synchronism may be achieved or retained.

ETB (End of Transmission Block): A communication control character used to indicate the end of a block of data for communication purposes. ETB is used for blocking data where the block structure is not necessarily related to the processing format.

CAN (Cancel): A control character used to indicate that the data with which it is sent is in error or is to be disregarded.

EM (End of Medium): A control character associated with the sent data which may be used to identify the physical end of the medium, or the end of the used, or wanted, portion of information recorded on a medium. (The position of the character does not necessarily correspond to the physical end of the medium.)

SUB (Substitute): A character that may be substituted for a character which is determined to be invalid or in error.

ESC (Escape): A control character intended to provide code extension (supplementary characters) in general information interchange. The Escape character itself is a prefix affecting the interpretation of a limited number of succession following characters. ESC is usually terminated by a Shift In character(s).

FS (File Separator), GS (Group Separator), RS (Record Separator) and US (Unit Separator). These information separators may be used within data in optional fashion, except that their order of precedence relationship shall be: FS is the most inclusive, then GS, then RS. and US is least inclusive. (The content and length of a File, Group, Record, or Unit are not specified.)

DEL (Delete): This character is used primarily to “erase” or “obliterate” erroneous or unwanted characters in perforated tape. (In the strict sense, DEL is not a control character.)

c. Graphic Characters

SP (Space): A normally nonprinting graphic character used to separate words. It is also a format effecter” which controls the movement of the printing position, one printing position forward (applicable also to visual display devices).

◇ (Diamond): A noncoded graphic which shall be printed by a printing device to denote the sensing of an error when such an indication is required. As an interim standard, an asterisk (’) may be used for this function.

♡ (Heart): A noncoded graphic which may be printed by a printing device instead of the symbols for the control characters shown in columns 0 and 1 in table E-1.

E-6. KEYBOARD TABLES

The following three tables define the received or keytop symbols of Terminal, Communications ANAUGC-74A(V)3 in the ASCII and Baudot modes of operations:

- Table E-3: Keyboard - Printed Characters

NOTE

Even though the terminal does not have lower case letters on the keyboard, the table for lower case letters is included because it is possible for the terminal to transmit lower case letters to a distant station printer that does print lower case letters.

- Table E-4: Keyboard - Lower Case Letters

- Table E-5: Keyboard - Control Keys

NOTE

If an ASCII character with a parity error is received, a symbol will be printed locally and the Space code will be transmitted. In Baudot local printout, when a ◇ is printed, it is not put into memory; i.e., nothing is printed during transmission.

Table E-3. KEYBOARD — PRINTED CHARACTERS

Received or Keytop Symbol	Baudot Symbol	Printed Character		
		ASCII	Baudot	
		Print	Local Print	Transmission Print
!	Figs!	!	!	!
"	Figs"	"	"	"
#	Figs#	#	#	#
$	Figs$	$	$	$
%	None	%	◊	None
&	Figs&	&	&	&
'	Figs'	'	'	'
(	Figs(	(	(	(
)	Figs)	)	)	)
*	None	*	*	None
+	None	+	◊	None
,	Figs,	,	,	,
-	Figs-	-	-	-
.	Figs.	.	.	.
/	Figs/	/	/	/
0	Figs0	0	0	0
1	Figs1	1	1	1
2	Figs2	2	2	2
3	Figs3	3	3	3
4	Figs4	4	4	4
5	Figs5	5	5	5
6	Figs6	6	6	6
7	Figs7	7	7	7
8	Figs8	8	8	8
9	Figs9	9	9	9
:	Figs:	:	:	:
;	Figs;	;	;	;
<	None	<	◊	None
=	None	=	◊	None
>	None	>	◊	None
?	Figs?	?	?	?
@	None	@	◊	None
A	LtrsA	A	A	A
B	LtrsB	B	B	B
C	LtrsC	C	C	C
D	LtrsD	D	D	D
E	LtrsE	E	E	E

Table E-3. KEYBOARD — PRINTED CHARACTERS - Continued

Received or Keytop Symbol	Baudot Symbol	Printed Character		
		ASCII	Baudot	
		Print	Local Print	Transmission Print
F	LtrsF	F	F	F
G	LtrsG	G	G	G
H	LtrsH	H	H	H
I	LtrsI	I	I	I
J	LtrsJ	J	J	J
K	LtrsK	K	K	K
L	LtrsL	L	L	L
M	LtrsM	M	M	M
N	LtrsN	N	N	N
O	LtrsO	O	O	O
P	LtrsP	P	P	P
Q	LtrsQ	Q	Q	Q
R	LtrsR	R	R	R
S	LtrsS	S	S	S
T	LtrsT	T	T	T
U	LtrsU	U	U	U
V	LtrsV	V	V	V
W	LtrsW	W	W	W
X	LtrsX	X	X	X
Y	LtrsY	Y	Y	Y
Z	LtrsZ	Z	Z	Z
[	None	[	◊	None
\	None	\	◊	None
]	None	]	◊	None
^	None	^	◊	None
—	None	. .	◊	None
\	None	\	◊	None

Table E-4. KEYBOARD -- LOWER CASE LETTERS

Received or Keytop Symbol	Baudot Symbol	Printed Character		
		ASCII	Baudot	
		Print	Local Print	Transmission Print
a	LtrA	A	A	A
b	LtrB	B	B	B
c	LtrC	C	C	C
d	LtrD	D	D	D
e	LtrE	E	E	E
f	LtrF	F	F	F
g	LtrG	G	G	G
h	LtrH	H	H	H
i	LtrI	I	I	I
j	LtrJ	J	J	J
k	LtrK	K	K	K
l	LtrL	L	L	L
m	LtrM	M	M	M
n	LtrN	N	N	N
o	LtrO	O	O	O
p	LtrP	P	P	P
q	LtrQ	Q	Q	Q
r	LtrR	R	R	R
s	LtrS	S	S	S
t	LtrT	T	T	T
u	LtrU	U	U	U
v	LtrV	V	V	V
w	LtrW	W	W	W
x	LtrX	X	X	X
y	LtrY	Y	Y	Y
z	LtrZ	Z	Z	Z
{	None	|	◇	None
|	None	\	◇	None
{	None	|	◇	None
	None	^	◇	None
DEL/LTRS	Ltrs	SP	— —	— —

NOTE

In Baudot local printout, when a ◇ is printed, it is not put into memory; i.e., nothing is printed during transmission. SP indicates a spacing action.

Table E-5. KEYBOARD — CONTROL KEYS

Received or Keytop Symbol	Meaning		ASCII	Baudot	
		Baudot Symbol	Print	Local Print	Transmission Print
NUL	Nul/Idle	None	SP	◊	None
SOH	Start of Header	None	SP	◊	None
STX	Start of Text	None	SP	◊	None
ETX	End of Text	None	SP	◊	None
EOT	End of Transmission	None	SP	◊	None
ENQ	Inquiry	None	SP	◊	None
ACK	Acknowledge	None	SP	◊	None
BEL	Alarm	FigS/J Apostrophe	SP/Alarm/	SP/Alarm/ Apostrophe	SP/ALARM/ Apostrophe
BS	Backspace (in ASCII mode). Figures (in Baudot mode).	Fig	SP	^	
VT	Vertical Tabulation	None	SP	◊	None
FF	Form Feed	Need	SP	◊	None
SO	Shift Out	None	SP	◊	None
SI	Shift IN	None	SP	◊	None
DLE	Data Link Escape	None	SP	◊	None
DC1	Device Control 1	None	SP	◊	None
DC2	Device Control 2	None	SP	◊	None
DC3	Device Control 3	None	SP	◊	None
DC4	Device Control 4	None	SP	◊	None
NAK	Negative Acknowledge	None	SP	◊	None
SYN	Synchronous Idle	None	SP	◊	None
ETB	End of Trans. Block	None	SP	◊	None
CAN	Cancel	None	SP	◊	None
EM	End of Medium	None	SP	◊	None
SUB	Substitute	None	SP	◊	None
ESC	Escape	None	SP	◊	None
FS	File Separator	None	SP	◊	None
GS	Group Separator	None	SP	◊	None
RS	Record Separator	None	SP	◊	None
US	Unit Separator	None	SP	◊	None
SP*	Space	SP	SP	SP	SP

NOTE

In Baudot printout when a ◊ is printed, it is not put into memory; i.e., nothing is printed during transmission. *SP indicates Space Bar/Action.

APPENDIX F

OPERATOR EXAMPLES — SYSTEM COMMANDS

NOTES

(1) Refer to SYSTEM ABBREVIATIONS table J-1 in Appendix J for explanation of abbreviations and symbols, and to the ERROR MESSAGE LIST, table J-2 in Appendix J for the explanation of error message by number.

(2) Symbol for System Command is @.

(3) Refer to table J-3 for shortest acceptable form for commands and subcommands.

F-1. PRINT COMMAND

a. Operator Example No. 1 - Single Message.

While composing message No. 8, the operator sees that the MESSAGE RECEIVED lamp has turned on. The message being received is stored as message No. 9. To print out the received message No. 9, the operator uses the PRINT command.

Operator action
Inputs b_0 PRINT b_2 9b_0 CR

System response
10 line-feeds, message No. 9 printed out, 10 line-feeds and prints:
CR/LF
@
CR/LF

Comment
The system locates and prints out message No. 9. Upon completion of printing, the system returns to the System Command level (the message is not erased from memory).

b. Operator Example No. 2- Emptying Message Memory

The operator sees that the MEMORY FULL lamp has turned on and decides to empty message memory.

Operator action
Inputs b_0 PRINT b_2*b_0CR

System response
10 line-feeds, the highest precedence and oldest received message is printed out, 10 line-feeds, continued printing of the next oldest and highest precedence message until all are printed out.
CR/LF
@
CR/LF

Comment
The system prints out the messages in order, beginning with the highest precedence and oldest received message. Each message is erased as it is printed. After all messages are printed, the system returns to the System Command level.

F-2. TRANSMIT COMMAND - OPERATOR EXAMPLE

Message No. 11 has been composed and stored in message memory. The operator decides to transmit the message.

Operator action

Inputs b_0TRANSMIT$b_2$11b_0CR

System response

Issues 10 line-feeds, prints the message, executes 10 line-feeds, and prints:
CR/LF
@
CR/LF

Comment

The system finds and prints message No. 11, marks the message as transmitted, and returns to the System Command level.

F-3. REMOVE COMMAND - OPERATOR EXAMPLE

The operator decides to erase message No. 6 from the message memory.

Operator action

Inputs b_0REMOVE$b_2$6b_0CR

System response

CR/LF prints:
MESSAGE 6 REMOVED
CR/LF
@
CR/LF

Comment

The system deletes message No. 6 and returns to the System Command level.

F-4. PARAMETER COMMANDS - OPERATOR EXAMPLE

Refer to paragraph 2-14b .

F-5. EDIT COMMAND - OPERATOR EXAMPLE

Refer to paragraph 2-14c .

F-6. JUSTIFY COMMAND - OPERATOR EXAMPLE

The operator has made corrections to message number 10 and decides to justify the message for a new line length.

Operator action

Inputs b_0JUSTIFY$b_2$10b_0CR

System response

CR/LF
@
CR/2LF

Comment

The system justifies the designated message. The system then returns to the System Command level.

F-7. QUERY COMMAND - OPERATOR EXAMPLE

The operator wants to verify the status of the machine using the Query command.

Operator action

Inputs b_0QUERYb_0CR

System response

CF/2LF
SWITCH STATE = (+ ICT, KSR, RO)
OPERATIONAL STATE = (+ ICT, KSR, RO)
OPERATING CAPACITY = (+ FULL, DEGRADED)
MODE = (+ ASCII, BAUDOT)
BAUD RATE = (1200, 600, 300, 150, 75, 50, 45.5)
STOP BIT = (+1,2)
END OF LINE OPTION = (#b_2HH)
SPACE OPTION = (+ ON, OFF)
LINE LENGTH = (+b_2XX, NULL= 80)
LINE FEEDS = (+1, 2)
RECEIVE ENVELOPE ACTION =CR/LF b_1 b_1 $b_1$$b_1$$b_1$$b_1$$b_1$(#HH$b_1$) : (#HH$b_1$)
TRANSMIT ENVELOPE OPTION = $b_1$$b_1$$b_1$$b_1$$b_1$$b_1$$b_1$ (#HHb_1) : (#HHb_1)

Comment

The system executes the Query command, prints the message and then returns to the System Command level.

NOTES

1. In the Baudot mode, the following lines are printed:
   BELL OPTION = (+FIGURES S, FIGURES J)
   CR/2LF
   @
   CR/2LF
2. In the ASCII mode, the following lines are printed:
   PARITY OPTION + ODD CAPITAL LETTER OPTION = (+ ON, OFF)
   CR/2LF
   @
   CR/2LF

F-8. STATUS COMMAND - OPERATOR EXAMPLE

The operator wants to make sure he has printed out all messages received, and transmitted all the messages that have been composed and stored in message memory. Two messages are in message memory.

Operator action

Inputs b_0STATUSb_2*b_0CR

System response

CR/LF
RECEIVED MESSAGE NO. 0001
PRECEDENCE R PRINTED 001
BLOCKS CR/2LF
COMPOSED MESSAGE NO. 0002
PRECEDENCE R NOT TRANSMITTED
004 BLOCKS CR/2LF
MEMORY 003% FULL
CR/2LF
@
CR/2LF

Comment

- The * input tells the system to print the status of all messages.
- The system prints messages by their message number and precedence.
- If messages have the same precedence, the oldest received message is printed first, followed by the composed message.
- Whether the message is a received or composed message, and whether it has been printed or transmitted is indicated.
- Total number of blocks of the message memory for each message used is printed. This is followed by the total percent of message memory occupied. After completing the printing, the system returns to the System Command level.

NOTES

1. If the operator has input “STATUS b21 CR”, only information concerning message No. 1 would have been printed. The percent of the total of message memory full would also be printed.
2. If the operator has input "STATUS b0 CR", the system would have printed only the last received message and the percent of message memory all messages occupied.

F-9. TTY COMMAND - OPERATOR EXAMPLE

The operator wants to notify all stations that the system will be off line for 10 minutes.

Operator action
Inputs b0TTYb0CR

System response
CR/2LF

Comment
The system accepts command and issues a carriage-return and two line-feeds to indicate that it is ready for the operator to enter the message. The message is transmitted when a carriage-return is entered. The system is returned to the System Command level.

APPENDIX G

OPERATOR EXAMPLES — PARAMETER SUBCOMMANDS

NOTES

1. Refer to SYSTEM ABBREVIATIONS, table J-1 in Appendix J, for explanation of abbreviations and symbols, and to the ERROR MESSAGE LIST, table J-2 in Appendix J, for the explanation of error messages by number.

2. The printed symbol for PARAMETER command is a dash (—).

G-1. LINE SUBCOMMAND

This subcommand allows the operator to select the length of the text line. On power-up initialization. the line length is set at 80. If no value is selected, 80 is used. The value selected must be between 40 and 80, & error message number 10 is printed out, and the subcommand terminated.

a. The keystroke sequence for the LINE subcommand is either:

(1) b_0LINE (+ b_2XX) b_0CR (XX represents the line length figure).

(2) b_0LINE CR (if no value is input, the system recognizes the value as 80).

b. The shortest acceptable form of the subcommand is LIN.

c. Operator example: Having entered the PARAMETER command level in paragraph 2-14b, the operator decides to set the text line length at 60. The operator knows from the prompt sequence print-out (CR/LF - CR/2LF), that the system is ready to accept the LINE subcommand as follows:

Operator action

Inputs b LINE b 60b CR

System response

CR/2LF
CR/2LF

Comment

Terminal accepts the input and sets the line length at 60.

G-2. SETAB SUBCOMMAND

This subcommand allows the operator to select one or more tab positions. If any of the selected tab sets exceed the set line length, error message number 10 prints, and only valid tabs are set. If a selected tab is already set, no change is made. No more than 12 tabs can be set. The total number of tabs includes previously selected and new tab settings.

a. If more than 12 tabs are selected. the subcommand accepts the first 12 tabs and prints error message number 9. The system returns to the PARAMETER Command level. The PARAMETER Command prompt sequence symbol is printed.

b. After accepting and setting the position, the system prints all the previously set and new tab positions.

c. The keystroke sequence for the SETAB subcommand is “b_0SETAB #b_2 (enter desired tab set position) b_0CR”.

d. The shortest acceptable form of the subcommand is SE.

e. operator example: Remaining in the PARAMETER command level, the operator decides to set tabs at 40, 45 and 60.

Operator action

Inputs b_0SETAB$b_0$40$b_0$45$b_0$60b_0CR

System response

CR/2LF
040$b_1$$b_1$045$b_1$$b_1$060
CR/LF
CR/2LF

Comment

Terminal accepts the input and sets tabs at 40, 45, and 60. It issues the parameter prompt sequence.

G-3. CLRTAB SUBCOMMAND

This subcommand allows the operator to clear one to 12 specified tabs. To remove all tabs set, enter " ". The system is powered up with NO tabs set.

a. After clearing the specified tabs, any remaining tabs are printed. If no tabs remain, error message number 20 prints.

b. The keystroke sequence for the CLRTAB subcommand is "b_0CLRTAB (+(#b_2XX), b_2*) b_0CR".

c. The shortest acceptable form of the subcommand is CL.

d. Operator example: Still operating in the PARAMETER command level, the operator wants to clear the tab set at 45.

Operator action
Inputs b_0CLRTAB$b_2$45b_0CR

System response
CR/2LF
040$b_1$$b_1$060
CR/LF
CR/2LF

Comment
The terminal accepts the command, clears the tab at 45, and responds by printing the tabs set in the terminal, followed by the PARAMETER prompt sequence.

G-4. DISPLAY SUBCOMMAND

This subcommand allows the operator to print out all tab settings, in order from lowest to highest. If none are set, error message number 20 is printed.

a. The keystroke sequence for the DISPLAY subcommand is "b_0DISPLAYb_0CR".

b. The shortest acceptable form of the subcommand is DI.

c. The system response is "XXX (#$b_1$$b_1$XXX)" (XXX represents the tab setting).

d. Operator example: With the system operating in the PARAMETER command level the operator wants to check the tab settings.

Operator action
Inputs b_0DISPLAYb_0CR

System response
CR/LF
0/0$b_1$$b_1$060
CR/LF
CR/2LF

Comment
The terminal prints the tab settings and issues the PARAMETER prompt sequence.

G-5. CAPIT SUBCOMMAND

NOTE

This subcommand is only available in the ASCII mode.

This subcommand allows the operator to set or reset the capitalize option. If this option is set, all lower case letters (a through z) input from the keyboard are changed to capitals and stored as such in memory. If this option is not set, no change is made.

a. If CAPIT option is tried in Baudot, error message number 10 is printed.

b. The keystroke sequence for the CAPIT subcommand is “b_0CAPITb_2 (+ON, OFF) b_0CR”.

c. The shortest acceptable form of the subcommand is CA.

d. Operator example: With the system in the PARAMETER command level, the operator wants to set the CAPIT option to off.

Operator action
Inputs b_0CAPITb_2OFFb_0CR

System response
CR/LF
CR/2LF

Comment
Terminal accepts the command and all letters are stored in message memory without being changed.

G-6. REMIND SUBCOMMAND

This subcommand allows the operator to have the REMIND option on or off. If the REMIND option is on, whenever a TRANSMIT command or a TTY command is given in the ICT state, the following reminder is printed: KEY TRANSMITTER AND ENTER CR CR/2LF.

NOTE

KEY TRANSMITTER refers to turning the TRANSFER switch to ON.

a. On power-up initialization, this option is off.

b. The keystroke sequence for the REMIND subcommand is “b_0REMINDb_2 (+ON, OFF) b_0CR”.

c. The shortest acceptable form of the subcommand is REMI.

d. Operator example : With the system in the PARAMETER command level, the operator wants to have the REMIND option on.

Operator action
Inputs b_0REMINDb_2 +ONb_0CR

System response
CR/LF
CR/LF

Comment

The terminal accepts the command and sets the remind option for the TRANSMIT and/or TTY commands.

G-7. END-OF-LINE SUBCOMMAND

This subcommand allows the operator to select the end-of-line (EOL) sequence for transmission. The EOL character is sent in place of a carriage-return.

NOTE

When transmission circuit requirements dictate a change in the EOL, the station SOP determines the change.

a. The EOL character sequence consists of zero to eight characters. Each character is entered as two hexadecimal digits representing the ASCII code (table G-1).

b. If more than eight characters are selected, or the hexadecimal digits do not correspond to an ASCII character, error message No. 10 is printed.

c. On power-up initialization, the EOL sequence is:

Hexadecimal code: 0D0D0A
Characters: CR CR LF

d. If transmission is in process when the EOL subcommand is selected, error message No. 19 is printed, no change is made and the subcommand is complete.

e. The keystroke sequence for the EOL subcommand is “b_0EOL(#b_2HH)b_2 CR”.

NOTE

A null EOL produces a null EOL sequence.

f. The shortest acceptable form of the subcommand is EO.

Operator example: While in the PARAMETER command level, the operator decides to attach the ASCII code for HEXADECIMAL 5F to the end of each line.

Operator action
Inputs b_0EOL$b_2$5Fb_0CR

System response
CR/2LF
CR/2LF

Comment

The terminal accepts the command and sets the ASCII code,

Table G-1. HEX-ASCII CONVERSION

HEX	ASCII	HEX	ASCII	HEX	ASCII
00	NULL	2B	+	56	V
01	SOH	2C	'	57	W
02	STX	2D	-	58	X
03	ETX	2E	.	59	Y
04	EOT	2F	/	5A	Z
05	ENQ	30	0	5B	[
06	ACK	31	1	5C	\
07	BEL	32	2	5D	]
08	BS	33	3	5E	^
09	HT	34	4	5F	—
0A	LF	35	5	60	/
0B	VT	36	6	61	a
0C	FF	37	7	62	b
0D	CR	38	8	63	c
0E	SO	39	9	64	d
0F	SI	3A	:	65	e
10	DLE	3B	;	66	f
11	DC1	3C		67	g
12	DC2	3D	=	68	h
13	DC3	3E		69	i
14	DC4	3F	?	6A	j
15	NAK	40	@	6B	k
16	SYN	41	A	6C	l
17	ETB	42	B	6D	m
18	CAN	43	C	6E	n
19	EM	44	D	6F	o
1A	SUB	45	E	70	p
1B	ESC	46	F	71	q
1C	FS	47	G	72	r
1D	GS	48	H	73	s
1E	RS	49	I	74	t
1F	US	4A	J	75	u
20	SP	4B	K	76	v
21	!	4C	L	77	w
22	''	4D	M	78	x
23	#	4E	N	79	y
24	$	4F	O	7A	z
25	%	50	P	7B	}
26	&	51	Q	7C	|
27	/	52	R	7D	{
28	(	53	S	7E	~
29	)	54	T	7F	DEL
2A	*	55	U		

G-8. LINE-FEED SUBCOMMAND

This subcommand allows the operator to select either one or two line-feeds following a carriage-return.

a. On power-up initialization, line-feed is set at 1.

b. The keystroke sequence for the line-feed subcommand is “b_0LFb_2(+1, 2)b_0CR”. If 1 or 2 is not specified, error message No. 10 is printed.

c. The shortest acceptable form of the subcommand is LF.

d. Operator example: In the PARAMETER command level, the operator wants a double line-feed after each carriage-return.

Operator action

Inputs b_0LFb_2(+1, 2)b_0CR

System response

CR/2LF
CR/2LF

Comment

The terminal accepts the input and sets a double line-feed into the system.

G-9. SPACE SUBCOMMAND

In ASCII only, this subcommand allows the operator to have the space option on or off.

a. If the space option is on and a tab character is input, the tab character is replaced by a space. Spaces are inserted until a tab position or the end of the line is reached.

b. If the space option is off, the tab character is inserted into the message. Spaces are inserted until a tab set position or the end of the line is reached.

NOTE

If “ON” or “OFF” is not inserted as an operand, error message no. 10 is printed, and no change is made.

C. In ASCII, the space option is off at power up initialization, but may be placed in an “ON” position.

d. In Baudot, the space option is on at power-up initialization, but cannot be placed in an “OFF” position.

e. The keystroke sequence for the SPACE subcommand is “b_0SPACEb_2(+ON, OFF) b_0CR”.

f. The shortest acceptable form of the subcommand is SP.

g. operator example: System is in ASCII and the operator wants to activate the space option to “ON”.

Operator action
Inputs b_0SPb_0ONb_0CR

System response
CR/2LF
CR/LF

Comment
Terminal accepts the input and sets SPACE option.

G-10. PAPER SUBCOMMAND

This subcommand turns off the print drum and ribbon-feed motor, so that the paper and/or ribbon may be changed without a loss of messages in memory. No further inputs are printed until the motor is restarted by executing the GO subcommand. All other keystrokes are ignored.

NOTE

PAPER subcommand is only valid in ICT state.

a. The LINE-FEED switch is activated to assist in loading the paper.

b. Incoming messages are lost if the memory becomes full while the printer is inactive.

c. If the paper runs out, the PAPER subcommand is activated and stops the print drum and ribbon feed.

NOTE

Operator must initiate the GO command to restart the motor.

d. The keystroke sequence for the PAPER subcommand is “b0PAPERb0CR”.

e. The shortest acceptable form of the subcommand is PAPER.

f. Operator example While in the PARAMETER command level, the operator wants to resupply the terminal with paper.

Operator action

Inputs b0PAPERb0CR

System response

Print drum and ribbon feed stop.

Comment

Paper and/or ribbon may be changed. All keystrokes are ignored until GO CR is entered.

G-11. GO SUBCOMMAND

This subcommand restarts the motor that operates the print drum and ribbon feed.

a. The keystroke sequence for the GO subcommand is GO CR.

b. The shortest acceptable form of the subcommand is GO.

c. Operator example: While in the PAPER subcommand, the operator replenishes the paper supply or ribbon. When the operator is ready to turn on the print drum and ribbon feed, the operator performs the following:

Operator action

Inputs b0GO CR

System response

CR/2LF
CR/2LF

Comment

The terminal accepts the command. The print drum and ribbon feed start operating again. The terminal is returned to the PARAMETER command level.

NOTE

If the system has been in the SYSTEMS command, or the EDIT command, and the paper has run out, the system would have automatically returned to that command level.

G-12. TENVELOPE SUBCOMMAND

This subcommand allows the operator to set the envelope which is put around a message for transmission. This sequence never appears in the message storage and is used for communications purposes only.

NOTE

The station SOP will determine the hexadecimal digits for the TRANSMIT ENVELOPE OPTION.

a. The envelope consists of zero to eight characters of start sequence. These sequences are entered as hexadecimal digits representing each ASCII character (refer to table G-1).

b. If more than the required characters are specified or the hexadecimal digit does not correspond to an ASCII character, error message No. 10 is printed.

c. If a message is being transmitted when the TENVELOPE subcommand is selected, error message No. 19 is printed. No change is made, and the subcommand is complete.

d. In Baudot mode, on power-up initialization, the envelope is empty.

e. In ASCII mode, on power-up initialization, the envelope is as follows:

	Front	End	Repeated 12 times
Hexadecimal code:	56 5A 43 5A 43	4E 4E 4E 4E	7F - 7F
ASCII characters:	V Z C Z C	N N N N	DEL - DEL

f. The keystroke sequence for the TENVELOPE subcommand is b_0TENVELOPE (#b_2HH) : (#b_2HH) b_0CR.

NOTE

If null (no) envelopes are desired, do not enter any hexadecimal digits after the space following the subcommands. Enter the colon (:), a space, and a CR.

g. The shortest acceptable form of the subcommand is TENV.

h. operator example: While in the PARAMETER command level, the operator decides to change the TENVELOPE using the ASCII Hexadecimal code **to** read BEGIN and END.

Operator action

Inputs b_0TENVELOPE$b_2$42$b_2$45$b_2$47$b_2$49$b_2$4E: $b_2$45$b_2$4E$b_2$44b_0CR

System response

CR/2LF
CR/2LF

Comment

This establishes the transmit envelope as:

	Front	End
Hexadecimal code:	42 45 47 49 4E	45 4E 44
ASCII characters:	BEGIN	END

G-13. RENVELOPE SUBCOMMAND

This subcommand allows the operator to set the envelope which is removed from a message on reception. This sequence never appears in message storage and is used for communication purposes only.

a. The envelope consists of zero to eight characters of start sequence, and zero to sixteen characters of stop sequence. These sequences are entered as hexadecimal digits representing each ASCII character (refer to table G-1).

b. If more than the required characters are specified, or a hexadecimal digit does not correspond to an ASCII character, error message No. 10 is printed.

c. If a message is being received when the RENVELOPE subcommand is selected, error message No. 19 is printed, no change is made, and the subcommand is complete.

d. In Baudot mode, on power-up initialization, the envelope is empty.

e. In ASCII mode, on power-up initialization, the envelope is as follows:

	Front	End
Hexadecimal code: ASCII characters:	56 5A 43 5A 43: V Z C Z C :	4E 4E 4E 4E N N N N

f. The keystroke sequence for the RENVELOPE subcommand is " b_0RENVELOPE (#b_2HH) : (#b_2HH) b_0 CR ".

g. The shortest acceptable form of the subcommand is RENV.

h. Operator example: While in the PARAMETER command level, the operator decides to change the RENVELOPE using the ASCII Hexadecimal code to read" BEGIN" and" END" See table G-1 to convert "BEGIN" and " END" to Hex. codes.

Operator action

Inputs b_0RENVELOPE$b_1$42$b_2$45$b_2$47$b_2$49$b_2$4E:$b_2$45$b_2$4E$b_2$44b_0CR.

System response

CR/2LF
CR/2LF

Comment

This establishes the receive envelope as:

	Front	End
Hexadecimal code: ASCII characters:	42 45 47 49 4E BEGIN	45 4E 44 END

G-14. EXIT SUBCOMMAND

This subcommand causes the system to return to the System Command level from the PARAMETER command level. The system responds by printing the System Command prompt sequence symbol (@).

a. The keystroke sequence for the exit subcommand is “bₒEXITbₒCR”.

b. The shortest acceptable form of the subcommand is EX.

c. Operator example: From the PARAMETER command level, the operator wants to return to the System Command level.

Operator action

Inputs bₒEXITbₒCR

System response

CR/2LF
@
CR/2LF

Comment

This returns the terminal to the System Command level.

APPENDIX H

OPERATOR EXAMPLES - EDIT SUBCOMMANDS

NOTE

Refer to SYSTEM ABBREVIATIONS, table J-1 in Appendix J, for explanation of abbreviations and symbols, and to the ERROR MESSAGE LIST, table J-2 in Appendix J, for the explanation of error message by number.

H-1. TOP SUBCOMMAND

This subcommand moves the line pointer to the first line of the message being edited, and that line is printed. If the message is empty, error message No. 7 is printed.

a. The keystroke sequence for the TOP subcommand is " bₒTOPbₒCR".

b. The shortest acceptable form of the subcommand is TO.

c. Operator example: The operator wants to check the first line of a message.

Operator action
Inputs bₒTOPbₒCR

System response
CR/LF prints THE QUICK BROWN FOX JUMPED OVER THE
CR/2LF.
*
CR/2LF

Comment
The terminal prints the top line of the message.

H-2. BOTTOM SUBCOMMAND

This subcommand moves the line pointer to the last line of the message being edited, and that line is printed. If the message is empty, error message No. 7 is printed.

a. The keystroke sequence for the BOTTOM subcommand is " bₒBOTTOMbₒCR ".

b. The shortest acceptable form of the subcommand is BO.

c. Operator example: The operator wants to review the last line of a message.

Operator action
Inputs bₒBOTTOMbₒCR

System response

CR/LF prints BEFORE HE JUMPS AGAIN
CR/2LF
*

CR/2LF

Comment

The terminal prints out the last line of the message.

H-3. UP SUBCOMMAND

This subcommand allows the operator to move the line pointer a designated number of lines towards the first line of the message being edited, and prints the line at the new position.

a. If the number of lines is not entered, it is assumed to be 1. Entering an "*" is the same as executing the TOP subcommand. If a number greater than 99 or an alpha character is entered, error message No. 10 is printed.

b. If the number of lines entered is greater than the number of lines from the position of the line pointer to the top line of the message, the line pointer is moved to the first line. That line is printed.

c. If the message being edited is empty, error message No. 7 is printed.

d. The keystroke sequence for the UP subcommand is (1), (2), or (3) below.

(1) b_0UPb_2(XX)b_0CR - XX is the input for a specific number of lines.

(2) b_0UPb_0CR - to move the pointer up one line.

(3) b_0UPb_2 *b_0CR - to move the pointer to the top line,

e. The shortest acceptable form of the subcommand is U.

f. Operator example: From line 10 in the message, the operator wants to review the top line of the message.

Operator action

Inputs b_0UPb_2*b_0CR

System response

CR/LF prints THE QUICK FOX JUMPED OVER THE
CR/2LF
*

CR/2LF

Comment

The terminal prints out the first line of the message.

H-4. DOWN SUBCOMMAND

This subcommand allows the operator to move the line pointer a designated number of lines towards the last line of the message, and prints the line at the new position.

a. Entering an" * " is the same as executing the BOTTOM subcommand. If a number greater than 99 or an alpha character is entered, error message No. 10 is printed.

b. If the line being edited is empty, error message No. 7 is printed.

c. If the number of lines entered is greater than the number of lines from the position of the pointer to the last line of the message, the line pointer is moved to the last line. That line is printed.

d. The keystroke sequence for the DOWN subcommand is either (1), (2), or (3) below:

(1) b_0DOWNb_2(XX)b_0CR - XX is the number of lines the pointer is moved down.

(2) b_0DOWNb_0CR - to move the pointer one line down.

(3) b_0DOWNb_2*b_0CR - to move the pointer to the bottom line.

e. The shortest acceptable form of the subcommand is DO.

f. Operator example: The operator wants to move the pointer down six lines from its present position.

Operator action

Inputs b_0DOWN$b_2$6b_0CR

System response

CR/LF terminal prints text six lines down from the line pointer position.
CR/2LF
*

CR/2LF

Comment

The terminal moves down six lines and prints out the line.

H-5. BEFORE SUBCOMMAND

This subcommand allows the operator to insert a block of text before the current line. This is the only subcommand that allows the operator to add lines of text in front of line 1 of a previously composed message.

a. The process is terminated by pressing the HLT key. The line pointer remains at the original line.

b. Lines are entered until the desired block has been entered. The BEFORE subcommand provides no prompt sequence.

c. Pressing the HLT key indicates that the desired text has been created. The subcommand is terminated and a prompt indicator (*) is printed.

d. The message is inserted line by line. Each line is entered into the memory when a carriage-return is entered, or if the line reaches the current line length. A carriage-return is added to the line.

e. A non-empty line, terminated by pressing the HLT key, adds a carriage-return to the line, inserts the line into the message, and terminates the BEFORE subcommand.

f. An empty line, terminated by pressing the HLT key, terminates the subcommand.

NOTE

If there is not sufficient memory available to insert the input line, error message No. 3 is printed. The line is not inserted into the message. The subcommand is terminated.

g. Blank lines are inserted into the memory as a SPACE code, followed by a CR code.

h. The keystroke sequence for the BEFORE subcommand is “b0BEFOREb0CR ”.

i. The shortest acceptable form of the subcommand is BE.

j. Operator example: The operator has a new paragraph number one to insert in a previously composed message. After moving the pointer to line one, the operator is ready to insert the new paragraph.

Operator action

Inputs b0BEFOREb0CR and types in the text; presses the HLT key to terminate the subcommand.

NOTE

There will be no System response until the HLT key is pressed and subcommand is terminated.

System response

The edit prompt sequence is issued.

CR/2LF
*

CR/2LF

Comment

The terminal inserts the text into message memory before line one.

NOTE

The pointer remains on the original line of the text.

H-6. INSERT SUBCOMMAND

This subcommand allows the operator to compose a message and also to insert a block of text after the current line. The command is terminated by pressing the HLT key. The line pointer moves to the last inserted line of the text.

NOTE

This is the only subcommand which allows the operator to add lines of text after any line within the text.

a. The INSERT subcommand provides no prompt sequence. Lines are inserted until the desired block of text has been entered. Pressing the HLT key indicates that the desired block of text has been inserted and the subcommand is terminated.

b. Each line of text is inserted into the message when a carriage-return is entered or when the current line length is reached. A carriage-return is added to the line. The line pointer moves to the last inserted line of text.

c. A non-empty line, terminated by pressing the HLT key, adds a carriage-return to the line, inserts the line into the message, sets the line pointer to the inserted line, and terminates the command.

d. An empty line, terminated by pressing the HLT key, terminates the subcommand.

NOTE

If there is not sufficient memory available to insert the line of text, error message No. 3 is printed. The line is not inserted into the message. The subcommand is terminated.

e. Lines which consist of only carriage-returns are inserted into the memory as a SPACE code, followed by a CR code.

f. The keystroke sequence for the INSERT subcommand is " b0lNSERTb0CR ".

g. The shortest acceptable form of the subcommand is 1.

h. Operator example: The operator has a paragraph to add at the end of a previously composed message. After moving the pointer to the last line of the message, the operator is ready to add the new paragraph.

Operator action

Inputs b0lNSERTb0CR and types in the new paragraph text and presses the HLT key.

System response

None until after the subcommand is terminated; then the EDIT prompt sequence is issued:
CR/2LF
*
CR/2LF

Comment

The terminal adds the new paragraph to the end of the message.

H-7. DELETE SUBCOMMAND

This subcommand allows the operator to delete (erase) a specified number of lines from the edited message, starting at the current line pointer. If the number of lines to be deleted is not entered, it is assumed to be 1. If an " * " is specified, or the number of lines specified is greater than the number of lines remaining in the message, the rest of the message is deleted.

a. At the completion of a delete, the line pointer is set either at the next line not deleted, or at the new last line of the message.

b. If the message is empty after the deletion, error message No. 7 is printed.

c. If the message is not empty after the deletion, the line at the line pointer is printed.

d. If the number of lines specified is greater than 99 or is an alpha character, error message No. 10 is printed.

e. The keystroke sequence for the DELETE subcommand is either (1), (2), or (3) below.

(1) b_0DELETEb_2XX)b_0CR - XX represents the number of lines to be deleted.

(2) b_0DELETEb_2*b_0CR - delete all remaining lines.

(3) b_0DELETEb_0CR - delete the current line.

f. The shortest acceptable form of the subcommand is DE.

g. Operator example: The operator wants to delete lines 3, 4, 5, and 6 from the message. After moving the line pointer to line 3, the operator is ready to delete lines 3, 4, 5, and 6.

Operator action

Inputs b_0DELETE$b_2$4b_0CR

System response

Prints line number 7 and issues the EDIT prompt sequence.

Comment

Deletes lines 3, 4, 5, and 6, then prints the following line.

H-8. FIND SUBCOMMAND

This subcommand allows the operator to locate a portion of a text by using a phrase of up to 20 characters.

a. From the line pointer position, the system searches the following lines to find the phrase. The phrase cannot be located if the pointer is at or below the phrase. If the pointer is not changed, error message No. 4 is printed, and the subcommand is terminated.

b. When the phrase is found, the pointer is moved to the line which contains the phrase. The line is printed and the subcommand is terminated.

NOTE

The phrase must be on only one line.

c. The phrase cannot contain carriage-return characters. It must contain at least one character, or error message No. 5 is printed.

d. Use of Decimeters:

(1) Any printable character which is used to separate the phrase to be found from the parameter field of the subcommand is called a delimeter.

(2) The only restrictions on the use of delimeters are:

- The delimeter must be a character which is not in the phrase to be found.
- The delimeter must be the same on both sides of the phrase.
- There can be no space between the delimeter and the first letter of the first word of the phrase to be found.
- There can be no space between the delimeter and the last letter of the last word of the phrase to be found.

e. If a phrase of more than 20 characters is entered, error message no. 5 is printed.

f. The keystroke sequence for the FIND subcommand is “b_0FINDb_2 DELIMITER - PHRASE -DELIMITERb_0CR”.

g. The shortest acceptable form of the subcommand is F.

h. Operator example: The operator wants to locate the phrase “REPORT THE COOR-DINATES”, so that the spelling can be corrected.

NOTE

Because “co-ordinates” is spelled wrong in the text, it must be spelled wrong in the FIND subcommand.

NOTE

The delimiter character in this example is the question (?) mark.

Operator action

Inputs b_0FINDb_2? REPORT THE COORDINATES? b_0CR

System response

CR/LF prints REPORT THE COORDINATES, the edit prompt sequence is issued:
CR/2LF
*

CR/2LF

Comment

The terminal finds the phrase, moves the line pointer down, and prints the line containing the phrase.

H-9. LIST SUBCOMMAND

This subcommand allows the operator to print a specified number of lines of the message being edited, beginning at the current line pointer position. The line pointer position is not changed.

a. If the number of lines to be printed is not entered, it is assumed to be 1. If an “*” is entered, the remainder of the message is printed.

b. If the number of lines is greater than 99, or is an alpha character, error message No. 10 is printed. If the number of lines specified is greater than the number of lines from the current line to the end of the message, only the remainder of the message is printed.

c. Pressing the HLT key during printing stops the Printing, and error message No. 7 is printed.

d. If the message is empty, error message No. 7 is printed.

e. The keystroke sequence for the LIST subcommand is either (1), (2), or (3) below:

(1) b_0LISTb$_2$XX CR–(XX represents the number of lines be printed beginning at the current line.)

(2) b_0LISTb$_2$ ★ CR—(Prints the entire message beginning at the current line.)

(3) b_0LISTb$_0$ CR–(Prints the current line.)

f. Operator example:The operator has the line pointer at line 10. The operator wants to print lines 10 through 15.

Operator action

Inputs b_0LISTb$_2$6b$_0$ CR

System response

CR/LF prints the 10th through the 15th line of text.
CR/2LF
*

CR/2LF

Comment

The terminal prints the current line and the 5 lines below the pointer position.

H-10. REPLACE SUBCOMMAND

This subcommand allows the operator to find a phrase of 1 to 20 characters in the message text, and to replace that phrase with a second phrase of 0 to 40 characters.

a. The system searches the current and following lines to find the phrase. The phrase must be on one line. The pointer is moved to this line. The characters in the first phrase are replaced by the characters in the second phrase.

b. If the new phrase causes a line length to be exceeded, a carriage-return is inserted. This creates a new line. The line pointer is moved to the new line. The new phrase is printed.

c. If the first phrase cannot be found, error message No. 4 is printed, and the subcommand is terminated.

d. Neither phrase may contain a carriage-return character, and the first phrase must contain at least 1 character, or error message No. 5 is printed.

e. If an entire line is deleted, the system deletes the carriage-return. The line pointer and printing are set as if the DELETE subcommand had been executed (see paragraph H-7, DELETE subcommand).

f. The keystroke sequence for the REPLACE subcommand is either (1) or (2) below:

(1) b_0REPLACEb_2DELIMITER phrase 1 DELIMITER phrase 2 DELIMITER b_0 CR - (to replace one phrase with another phrase.)

(2) b_0 REPLACEb_2DELIMITER Phrase 1 DELIMITER DELIMITERb_0 CR- (to delete the phrase without replacing it.)

g. The shortest acceptable form of the subcommand is REP.

h. Operator example: The operator wants to replace the phrase “17638147 NLT” with the phrase 23718863 NLT060700 JAN”.

Operator action

Inputs b_0REPLACEb_2?17638147bNLT?23718863b $_1$NLT$b_1$060700b_1JAN?b_0CR

NOTE

The delimiter character in this example is the question (?) mark.

System response

CR/LF prints the new line(s) containing the changed phrase
CR/2LF
*

CR/2LF

Comment

Finds and replaces with the new phrase and prints the new line(s) containing the phrase.

H-11. HEADER SUBCOMMAND

This subcommand provides prompting for a JANAP 128 PLAINDRESS header format. If the current line length is greater than 69 characters, error message No. 6 is printed, and the subcommand is terminated.

NOTE

The message text must have been already composed and entered into message memory.

a. The prompting consists of the terminal printing a series of questions, each one followed by a carriage-return and line-feed.

b. After each question, the operator must respond with a typed input, followed by a carriage-return. The number and type of characters to be input are given in parenthesis at the end of the question. If the input does not conform in number and type, error message No. 10 is printed, and the question is repeated.

c. The keystroke sequence for the HEADER subcommand is " bₒHEADERbₒCR ".

d. The shortest acceptable form of the subcommand is H.

e. Whenever data is being input, preceding and following spaces are allowed. The correction keys (DLC, DLL, REV), and CAPIT subcommand are active.

f. All numbers are entered with or without preceding zeros, as required. If the HLT key is pressed during the prompting, the prompting sequence is terminated, and control is returned to the EDIT command, and no change is made in the message.

g. For purpose of preparing the header, refer to table H-1.

NOTE

The JANAP 128 PLAIN DRESS header format is subject to periodic changes. Operator will refer to the station's Standard Operating Procedures (SOP) for the latest header format before using table H-1.

Table H-1. HEADER PROMPTS AND RESPONSES

NUMBER	PROMPT	RESPONSE
1	ENTER CHANNEL IDENTIFIER	3 alpha characters
2	ENTER ORIGINATOR ROUTING INDICATOR/PLAIN LANGUAGE ADDRESS (RI/PLA)	(See NOTE No. 1)
3	ENTER MESSAGE PRECEDENCE (1A)	Z (flash), O (Immediate), P (Priority) or R (Routine).
4	ENTER ORIGINATOR AND DESTINATION LANGUAGE AND MEDIA FORMAT (2A)	1 alpha character
5	ENTER CLASSIFICATION (1A)	U (Unclas), E (Unclas EFTO), C (Confidential), S (Secret), T (Top secret).
6	ENTER CONTENT INDICATOR/COMMUNICATION ACTION IDENTIFIER (4AN)	4 alpha/numeric
7	ENTER STATION SERIAL NUMBER (4N)	4 numeric
8	ENTER JULIAN DATE (3N)	3 numeric
9	ENTER TIME FILED (4N)	4 numeric
10	ENTER ACTION ROUTING INDICATOR/PLAIN LANGUAGE ADDRESS (RI/PLA)	(See NOTE No. 2) Sum total entries for prompts 10 and 11 will not exceed 50.

Table H-1. HEADER PROMPTS AND RESPONSES - Continued

NUMBER	PROMPT	RESPONSE
11	ENTER INFORMATION ROUTING - INDICATOR/PLAIN LANGUAGE ADDRESS (RI/PLA)	(See NOTE No. 2)
12	ENTER TIME OF DAY (ZULU TIME) (4N)	4 numeric
13	ENTER DAY, MONTH AND YEAR (2N 3A 2N)	2 numeric b 3 alpha b 2 numeric
14	ENTER CHANNEL SEQUENCE NUMBER (3N)	3 numeric

NOTES

1. The Routing Indicator/Plain Language Address (RI/PLA) is defined as: b_0RIb_0/b_0. RI is 4 to 7 alpha characters. In Prompt No. 2, the PLA is any amount of text required. Each line of text is terminated by a carriage- return, or exceeding the current line length. When the PLA is complete, the entry is terminated by entering a NULL line followed by a carriage- return.
2. In Prompt No. 10 and No. 11, if the PLA text exceeds the current line length, (69 characters maximum), error message No. 22 is printed, the RI/PLA is not entered in message memory, and the prompt is repeated. The PLA prompting is terminated by entering a NULL line followed by a carriage-return.

h. The ending (trailer of the message) is to be added, after the text of the message is formed, as follows:

BT CR
(Station serial No.) CR
CR/7LF

i. Operator example: The operator has initialized the system and decided to prepare the JANAP 128 PLAINDRESS header in preparation for transmission of the outgoing messages.

- To begin the PROMPT/RESPONSE sequence for the HEADER subcommand, the operator will first perform the operator action below.

Operator action

Inputs b0HEADERb0CR

- Using the following table H-2, Operator Example - Header Prompts and Responses, the operator will perform all OPERATOR ACTIONS after each TERMINAL PROMPT (beginning with TERMINAL PROMPT No. 1).

Table H-2. OPERATOR EXAMPLE - HEADER PROMPTS AND RESPONSES

NUMBER	TERMINAL PROMPT	OPERATOR ACTION	SYSTEM RESPONSE
1	CR/LF ENTER CHANNEL IDENTIFIER (3A) CR/LF	Inputs (Channel Identifier) CR	AAA CR/LF
2	ENTER ORIGINATOR ROUTING/INDICATOR/ PLAIN LANGUAGE ADDRESS (RI/PLA) CR/LF CR	Inputs (Originator Routing Indicator, and Plain Language Address) CR/LF	RUFLMMA/CGb2 MUNICHb2GERMANY CR/LF
3	ENTER MESSAGE PRECEDENCE (1A) CR/LF	Inputs (Message Precedence) CR	R CR/LF
4	ENTER ORIGINATOR AND DESTINATION LANGUAGE AND MEDIA FORMAT (2A) CR/LF	Inputs (Originator, Destination Language and Media Format) CR	TT CR/LF
5	ENTER CLASSIFICATION (1A) CR/LF	Inputs (Message Classi-fication) CR	U CR/LF
6	ENTER CONTENT INDICATOR/ COMMUNICATION ACTION IDENTIFIER (4AN) CR/LF	Inputs (Content Indicator/ Communication Action Identifier) CR	ZYUW CR/LF
7	ENTER STATION SERIAL NUMBER (4N) CR/LF CR	Inputs (Station Serial Number) CR	1234 CR/LF

Table H-2. OPERATOR EXAMPLE - HEADER PROMPTS AND RESPONSES - Continued

NUMBER	TERMINAL PROMPT	OPERATOR ACTION	SYSTEM RESPONSE
8	ENTER JULIAN DATE (3N) CR/LF	Inputs (Julian Date) CR.	111 CR/LF
9	ENTER TIME FILED (4N) CR/LF	Inputs (Time) CR.	0900 CR/LF
10	ENTER ACTION ROUTING INDICATOR/ PLAIN LANGUAGE ADDRESS (RI/PLA) CR/LF	Inputs (Action Routing Indicator) CR.	RUAGAAA/CGb₂SEOUL₂ KOREA CR/LF
	ENTER ACTION ROUTING INDICATOR/ PLAIN LANGUAGE ADDRESS (RI/PLA) CR/LF (See NOTE No.2 in Table H-1 for Prompts No.10 and No.11)	Inputs nothing; activates the CR	CR/LF
11	ENTER INFORMATION ROUTING INDICATOR/PLAIN LANGUAGE ADDRESS (RI/PLA) CR/LF	Inputs (Information Routing Indicator) CR.	RUCLDIA/CGb₂FTb₂ GORDONb₂GA CR/LF
	ENTER INFORMATION ROUTING INDICATOR/PLAIN LANGUAGE ADDRESS (RI/PLA) CR/LF (See NOTE No. 2 in Table H-1 for Prompts No.10 and No.11)	Inputs nothing; activates the CR	CR/LF
12	ENTER TIME OF DAY (ZULU TIME) (4N) CR/LF	Inputs (Time) CR.	0900 CR/LF
13	ENTER DAY, MONTH AND YEAR (2N 3A 2N) CR/LF	Inputs (Day, Month and Year) CR.	10 AUG 78 CR/LF
14	ENTER CHANNEL SEQUENCE NUMBER (3N) CR/LF	Inputs (Channel Sequence Number) CR.	222 CR/2LF *CR/2LF

j. Example of a JANAP 128(H) PLAIN DRESS Message.

JANAP 128(H) FORMAT ELEMENT	MESSAGE CONTENTS	END OF LINE FUNCTIONS
Header	RTTUZYUW RUEBABA1234 1081400-UUUU-RUKKLAA	(2CR) (1LF)
Transmission instructions	ZNR UUUUU	(2CR) (1LF)
Precedence; date-time group; message instructions	R 18123OZ APR 81	(2CR) (1LF)
Originator	FM AFSC ANDREWS AFB MD	(2CR) (1LF)
Action addressee(s)	TO ELMENDORF AFB ALASKA	(2CR) (1LF)
Separation	BT	(2CR) (1LF)
Classification, internal instructions; thought or idea expressed by originator (in that order)	UNCLAS (TEXT)	(2CR) (1LF)
Separation	BT	(2CR) (1LF)
EOM validation number	#1234	(2CR) (1LF)
End of Message functions (EOM)	(2CR) (8LF) NNNN	(12 LTRS)

H-12. APPEND SUBCOMMAND

This subcommand allows the operator to attach the text of one message to the end of another message. The message that is to be lengthened must be called up by message number. The APPEND subcommand is entered. The message number of the message to be added is entered. The text of the second message is added to the end of the first message.

a. Both messages must be valid messages (identified by a message number in the system), or error message No. 2 is printed, and the subcommand is terminated.

NOTE

The APPEND subcommand does not change any message.

b. If a message to be added contains characters with parity errors, those characters are changed to spaces as the added message is executed.

c. If the APPEND subcommand causes memory to become full, error message No. 3 is printed, and the subcommand is not executed.

d. The keystroke sequence for the APPEND subcommand is " b_0APPENDb_2 XXXXb_0CR".

e. The shortest acceptable form of the subcommand is AP.

f. Operator example: The operator wants to add message number 8 to message number 4. Both messages contain unit movement instructions and have identical addresses.

Operator action

Inputs b_0EDlT$b_2$4b_0 CR
Inputs b0APPENDb28b0CR

System response

CR/LF
Instructions complied with by 071600 hours
CR/2LF
*

CR/2LF

Comment

The system adds message 8 to the bottom of message 4, prints the last line of message 8, and issues the EDIT prompt sequence.

H-13. EXIT SUBCOMMAND

This subcommand causes the system to leave the EDIT or PARAMETER Command level and return to the System Command level. The system responds by printing the System Command prompt sequence.

a. The keystroke sequence for the EXIT subcommand is“ b0EXITb0CR”.

b. The shortest acceptable form of the subcommand is EX.

c. Operator example : The operator has finished the editing input and decides to return to the System Command level.

Operator action

Inputs b0EXITb0CR

System response

CR/2LF
*

CR/2LF

Comment

The system accepts the input and returns to the System Command level.

APPENDIX I

SUMMARY LISTS OF OPERATOR ACTIONS AND TERMINAL RESPONSES

I-1. GENERAL

a. The following lists decribe operator actions and the terminal response to each action. These lists can be used by the operator as a quick reference for the purpose of each control, and the purpose of each operator action.

b. These lists can also be used by the operator for a rapid operational check of the equipment in the ICT and KSR States.

I-2. SUMMARY LISTS

Summary List No. 1- Terminal Operation in the ICT State.

Summary List No. 2- Terminal Operation in the KSR State.

SUMMARY LIST NO. 1 - TERMINAL OPERATION IN THE ICT STATE

Step	Operator Action	Terminal Response	Comments
1	Set TRANSFER switch to OFF.	None	
2	Set AUDIO control to midpoint.	None	
3.	Set ILLUM control to midpoint.	None	
4	Set ASCII/BAUDOT MODE.	None	Places the terminal in the ASCII mode.
5	Set the BAUD RATE switch to 300.	None	Sets the data rate to 300 baud.
6	Set the REC MODE switch to LO DATA.	None	Conditions the receive circuit for low-level, non-inverted operation.
7	Set XMIT MODE switch to LO DATA.	None	Conditions the transmit circuit for low-level, non-inverted operation.
8	Set SELF TEST switch to OFF.	None	
9	Set SIGNAL NRZ/DIPHASE switch to NRZ.	None	Conditions the terminal for NRZ communication.
10	Set PARITY switch to ODD.	None	Conditions the communications circuits for odd parity operations.
11	Set STATE switch to ICT.	None	Allows the terminal to operate as an intelligent communications terminal.
12	Set CLOCK INT/EXT/ KG-30 switch to INT.	None	Allows the system to operate on the local clock.

SUMMARY LIST NO. 1 - TERMINAL OPERATION IN THE ICT STATE - Continued

Step	Operator Action	Terminal Response	Comments
13	Set CLOCK +/− switch to +.	None	Conditions the system to operate from the positive transitions of the clock.
14	Set FIG S/J switch to S	None	Used in Baudot mode to select whether a figure S or figure J code activates the audible alarm.
15	Set STOP BITS switch to 2	None	Adds 2 stop bits to all transmitted words.
16	Turn POWER switch to ON	Copy lamps are on and all other lamps are off. The terminal prints: CR/LF SYSTEMb₁INITIALIZED CR/LF LF LF LF SWITCHb₁STATE = ICT CR/LF OPERATIONALb₁STATE = ICT CR/LF OPERATINGb₁CAPACITY = FULL CR/LF MODE = ASCII CR/LF BAUDb₁RATE = 300 CR/LF STOPb₁BITS = 2 CR/LF ENDb₁OFb₁LINEb₁OPTION = ODb₁ODb₁OA CR/LF SPACEb₁OPTION = OFF CR/LF LINEb₁LENGTH = 80 CR/LF LINEb₁FEEDS = 1 CR/LF	Terminal goes from the Cold Start state to the Operation Validation/ State Determination state and into the ICT state.

SUMMARY LIST NO. 1 - TERMINAL OPERATION IN THE ICT STATE - Continued

Step	Operator Action	Terminal Response	Comments
16		RECEIVEb$_1$ENVELOPEb$_1$OPTION = CR/LF b$_1$b$_1$b$_1$b$_1$b$_1$b$_1$b$_1$56b$_1$5Ab$_1$43b$_1$ 5Ab$_1$43b$_1$: 4Eb$_1$4Eb$_1$4Eb$_1$4E CR/LF TRANSMITb$_1$ENVELOPEb$_1$ OPTION = CR/LF b$_1$b$_1$b$_1$b$_1$b$_1$b$_1$b$_1$56b$_1$5Ab$_1$43b$_1$ 5Ab$_1$43b$_1$: 4Eb$_1$4Eb$_1$4Eb$_1$4Eb$_1$7Fb$_1$7Fb$_1$ 7Fb$_1$7Fb$_1$7Fb$_1$ 7Fb$_1$7Fb$_1$7Fb$_1$7Fb$_1$7Fb$_1$7Fb$_1$ 7F CR/LF PARITYb$_1$OPTION = ODD CR/LF CAPITALb$_1$LETTERb$_1$OPTION = ON CR/LF CR/LF @ CR/LF	
17	b$_0$PARAMETERb$_0$CR	CR/LF-CR/LF	Puts the terminal in the PARAMETER Command.
18	b$_0$LINEb$_2$60b$_0$CR	CR/LF-CR/LF	Sets line length to 60.
19	b$_0$SETABb$_2$40b$_2$45b$_2$60b$_0$CR	CR/LF 040, 045, 060 CR/LF-CR/LF	Sets tabs at columns 40, 45 and 60.
20	b$_0$CLRTABb$_2$45b$_0$CR	CR/LF 040, 060 CR/LF-CR/LF	Clears tab at column 45.
21	b$_0$DISPLAYb$_0$CR	CR/LF 040, 060 CR/LF-CR/LF	Prints all tab positions.
22	b$_0$CAPITb$_2$OFFb$_0$CR	CR/LF-CR/LF	Allows lower case letters (a through z) to be stored in memory.

SUMMARY LIST NO. 1 - TERMINAL OPERATION IN THE ICT STATE - Continued

Step	Operator Action	Terminal Response	Comments
23	b_0REMINDb_2ONb_0CR	CR/LF-CR/LF	Sets the remind option for TRANSMIT Commands.
24	b_0EOL$b_2$5Fb_0CR	CR/LF-CR/LF	Attaches the ASCII code for Hexadecimal 5F to the end of each line in a message for transmission.
25	b_0LF$b_1$2b_0CR	CR/LF-CR/LF	Sets a double line-feed following a carriage-return.
26	b_0SPACEb_2ONb_0CR	CR/2LF-CR/2LF	Allows space characters to be input from the keyboard via the TAB key.
27	b_0PAPERb_0CR	Print drum and ribbon feed stop.	Paper and/or ribbon may be changed. All keystrokes are ignored until GO CR is entered.
28	GO CR	CR/2LF-CR/2LF	Print-drum and ribbon-feed start operating again. Returns the terminal to the PARAMETER Command.
29	b_0RENVELOPE$b_2$42$b_2$45$b_2$47$b_2$49$b_2$4E:$b_2$45$b_2$4E$b_2$44b_0CR	CR/2LF-CR/2LF	Establishes the receive envelope as: Front Hex. Code: 42 45 47 49 4E: ASCII Char: B E G I N End Hex. Code: 45 4E 44 ASCII Char: E N D.
30	b_0TENVELOPE$b_2$42$b_2$45$b_2$47$b_2$49$b_2$4E:$b_2$45$b_2$4E$b_2$44b_0CR	CR/2LF-CR/2LF	Establishes the Transmit envelope as: Front Hex. Code: 42 45 47 49 4E: ASCII Char: B E G I N End Hex. Code: 45 4E 44 ASCII Char: E N D.

SUMMARY LIST NO. 1 · TERMINAL OPERATION IN THE ICT STATE · Continued

Step	Operator Action	Terminal Response	Comments
31	b_0EXITb_0CR	CR/2LF @ CR/2LF	Returns the terminal to the System Command level.
32	b_0QUERYb_0CR	CR/2LF prints SWITCHb_1STATE = ICT CR/2LF OPERATIONALb_1STATE = ICT CR/2LF OPERATINGb_1CAPACITY = FULL CR/2LF MODE = ASCII CR/2LF BAUDb_1RATE = 300 CR/2LF STOPb_1BITS = 2 CR/2LF ENDb_1OFb_1LINEb_1OPTION = 5F CR/2LF SPACEb_1OPTION = ON CR/2LF LINEb_1LENGTH = 60 CR/2LF LINEb_1FEEDS = 2 CR/2LF RECEIVEb_1ENVELOPEb_1 OPTION = CR/2LF $b_1b_1b_1b_1b_1b_1b_1$42$b_1$45$b_1$47b_1 49$b_1$4Eb_1: 45$b_1$4E$b_1$44 CR/2LF TRANSMITb_1ENVELOPEb_1 OPTION = CR/2LF $b_1b_1b_1b_1b_1b_1b_1$42$b_1$45$b_1$47b_1 49$b_1$4Eb_1: 45$b_1$4E$b_1$44 CR/2LF PARITYb OPTION = ODD CR/2LF CAPITALb_1LETTERb_1OPTION = OFF CR/2LF CR/2LF @ CR/2LF	Terminal executes the QUERY Command.

SUMMARY LIST NO. 1 - TERMINAL OPERATION IN THE ICT STATE - Continued

Step	Operator Action	Terminal Response	Comments
33	b_0EDITb_0CR	CR/2LF prints MESSAGE NUMBER 0001 CR/2LF * CR/2LF	Places terminal in the Edit mode and terminal assigns a message number.
34	b_0INSERTb_0CR	CR/2LF	Places the terminal in the INSERT Sub-command.
35	Type: THE QUICK BROWN FOX JUMPED OVER THE (CR) LAZY DOGS BACK 0987654321 TYMES CR Depress HLT key	CR/2LF * CR/2LF	Inserts the composed message into message memory.
36	b_0TOPb_0CR	CR/2LF prints THE QUICK BROWN FOX JUMPED OVER THE CR/2LF * CR/2LF	The terminal prints the top line of the message.
37	b_0FINDb_2/LAZY DOGS/b_0 CR	CR/2LF prints LAZY DOGS BACK 0987654321 TYMES CR/2LF * CR/2LF	Searches for the indicated phrase and prints the line containing the phrase.
38	b_0REPLACEb_2/0987654321 TYMES/1234567890 TIMES /b_0CR	CR/2LF prints LAZY DOGS BACK 1234567890 TIMES CR/2LF * CR/2LF	Replaces the old phrase with the new phrase and prints the new line containing the phrase.
39	b_0EXITb_0CR	CR/2LF @ CR/2LF	Exits the EDIT Command level and returns the terminal to the System Command level.
40	b_0EDITb_0CR	CR/2LF prints MESSAGE NUMBER 0002 CR/2LF * CR/2LF	Places the terminal in the EDIT Command and terminal assigns a number.

SUMMARY LIST NO. 1 - TERMINAL OPERATION IN THE ICT STATE - Continued

Step	Operator Action	Terminal Response	Comments
41	b_0INSERTb_0CR	CR/2LF	Places terminal in the INSERT subcommand.
42	Type: NOW IS THE TIME CR Press the HLT key	CR/2LF * CR/2LF	Inserts the text into message memory.
43	b_0EXITb_0CR	CR/2LF @ CR/2LF	Returns terminal to the System Command level.
44	b_0EDIT$b_2$1b_0CR	CR/2LF prints MESSAGE NUMBER 0001 CR/2LF * CR/2LF	Puts terminal in the EDIT Command level and obtains message number 0001.
45	b_0APPEND$b_2$2b_0CR	CR/2LF prints NOW IS THE TIME CR/2LF * CR/2LF	Appends message number 0002 to message number 0001 in message memory.
46	b_0TOPb_0CR	CR/2LF prints THE QUICK BROWN FOX JUMPED OVER THE CR/2LF * CR/2LF	The terminal prints the top line of the message.
47	b_0FINDb_2/NOW IS THE TIME/b_0CR	CR/2LF prints NOW IS THE TIME CR/2LF * CR/2LF	Finds the selected phrase and prints the line containing the phrase.
48	b_0DELETEb_0CR	CR/2LF prints LAZY DOGS BACK 1234567890 TIMES CR/2LF * CR/2LF	Deletes "NOW IS THE TIME" from the message being edited and prints the line above it in the message.
49	b_0UPb_2*b_0CR	CR/2LF prints THE QUICK BROWN FOX JUMPED OVER THE CR/2LF * CR/2LF	Moves to the top of the message and prints the first line.

SUMMARY LIST NO. 1 - TERMINAL OPERATION IN THE ICT STATE - Continued

Step	Operator Action	Terminal Response	Comments
50	b_0LISTb_2*b_0CR	CR/2LF prints THE QUICK BROWN FOX JUMPED OVER THE CR/2LF LAZY DOGS BACK 1234567890 TIMES CR/2LF * CR/2LF	Prints the entire message beginning at the first line.
51	b_0HEADERb_0CR	CR/LF prints the first of the HEADER Subcommand prompts.	The operator can complete all the HEADER subcommand inputs and the subcommand will be terminated automatically or the operater may proceed to step 52 .
52	Activate the HLT key	CR/2LF * CR/2LF	Terminates the HEADER subcommand prior to completion of the Header input. The terminal returns to the EDIT Command level.
53	b_0EXITb_0CR	CR/2LF @ CR/2LF	Returns the terminal to the System Command level.
54	b_0JUSTIFY$b_2$1b_0CR	CR/2LF @ CR/2LF	Message number 0001 is line justified.
55	b_0PRINT$b_2$1b_0CR	CR/2LF prints THE QUICK BROWN FOX JUMPED OVER THE LAZY DOGS BACK CR/2LF 1234567890 TIMES CR/2LF @ CR/2LF	Message number 0001 is printed.
56	b_0TRANSMIT$b_0$1b_0CR	CR/2LF prints KEY TRANSMITTER AND ENTER CR	The terminal uses the REMIND option to prompt the operator to turn the TRANSFER switch to ON and then enter a CR.
57	Turn TRANSFER switch to ON	None	

SUMMARY LIST NO. 1 - TERMINAL OPERATION IN THE ICT STATE - Continued

Step	Operator Action	Terminal Response	Comments
58	Press CR key.	CR/2LF prints THE QUICK BROWN FOX JUMPED OVER THE LAZY DOGS BACK CR/2LF 1234567890 TIMES CR/2LF @ CR/2LF	Transmits and prints message number 0001.
59	Turn TRANSFER switch to OFF.	None	The terminal does not prompt for TRANSFER switch deactivation.
60	b_0REMOVE$b_2$1b_0CR	CR/2LF prints MESSAGE 0001 REMOVED CR/2LF @ CR/2LF	Delete message number 0001 from message memory.
61	b_0TTYb_0CR	CR/2LF	Places the terminal in the TTY Command.
62	Type: ALL GOOD MEN CR	CR/2LF prints KEY TRANSMITTER AND ENTER CR	The terminal uses the REMIND option to prompt the operator to turn the TRANSFER switch to ON and then enter a CR.
63	Turn TRANSFER switch to ON.	None	
64	Press the CR key.	CR/2LF @ CR/2LF	The message is transmitted. The terminal returns to the System Command level.
65	Turn TRANSFER switch to OFF.	None	The terminal does not prompt for TRANSFER switch deactivation.
66	Turn POWER switch to OFF.	All lamps are off.	

SUMMARY LIST NO. 2 - TERMINAL OPERATION IN THE KSR STATE

Step	Operator Action	Terminal Response	Comments
1	Set STATE switch to KSR position.	None	Allows the terminal to operate as a line teletypewriter.
2	Turn POWER switch to ON.	Copy lamps are on and all other lamps are off. The terminal prints: CR/LF SYSTEMb₁INITIALIZED CR/LF LF LF LF SWITCHb₁STATE = KSR CR/LF OPERATIONALb₁STATE = KSR CR/LF OPERATINGb₁CAPACITY = FULL CR/LF MODE = ASCII CR/LF BAUDb₁RATE = 300 CR/LF STOPb₁BITS = 2 CR/LF ENDb₁OFb₁LINEb₁OPTION = ODb₁ODb₁OA CR/LF SPACEb₁OPTION = OFF CR/LF LINEb₁LENGTH = 80 CR/LF LINEb₁FEEDS = 1 CR/LF RECEIVEb₁ENVELOPEb₁ OPTION = CR/LF b₁b₁b₁b₁b₁b₁b₁56b₁5Ab₁43b₁ 5Ab₁43b₁: 4Eb₁4Eb₁4Eb₁4E CR/LF TRANSMITb₁ENVELOPEb₁ OPTION = CR/LF b₁b₁b₁b₁b₁b₁56b₁5Ab₁43b₁ 5Ab₁43b₁:	Terminal goes from the Cold Start State to the Operation Validation/ State Determination state and into the KSR state.

SUMMARY LIST NO. 2 - TERMINAL OPERATION IN THE KSR STATE - Continued

Step	Operator Action	Terminal Response	Comments
2		4Eb,4Eb,4Eb,4Eb,7Fb,7Fb, 7Fb,7Fb,7Fb, 7Fb,7Fb,7Fb,7Fb,7Fb,7Fb, 7F CR/LF PARITYb,OPTION=ODD CR/LF CAPITALb,LETTERb,OPTION =ON CR/LF	
3	Type: NOW IS THE TIME	The terminal prints each character as it is typed.	
4	Press the DLL key.	CR/LF	Deletes the typed line.
5	Type: THE QUICK BROWNF	The terminal prints each character as it is typed.	
6	Press the DLC key.	The terminal prints a backward slash over the last character input, i.e., BROWNF.	Deletes the last character input.
7	Press the SP bar and type: FOX JUMPED OVER THE	The terminal prints each character as it is typed.	
8	Press the REV key.	CR/LF prints THE QUICK BROWN FOX JUMPED OVER THE	Reviews or reprints the current input line.
9	Turn TRANSFER switch to ON.	None	
10	Press the SP bar and type: LAZY DOGS BACK	CR/LF prints THE QUICK BROWN FOX JUMPED OVER THE LAZY DOGS BACK CR/LF	Transmits composed line. Verifies that the REMIND option is off.
11	Turn TRANSFER switch to OFF.	None	The terminal does not prompt for TRANSFER switch deactivation.
12	Turn POWER switch to OFF.	All lamps are off.	

APPENDIX J

REFERENCE TABLES

Table J-1. SYSTEM ABBREVIATIONS

Abbreviation	Meaning
CR	Carriage-return
LF	Line-feed
CR/LF	Used in this manual to signify a blank line and start of printing at left margin.
b_0	Specifies that no spaces between characters are required, but as many as are described may be entered optionally.
b_1	Specifies that only one space is required.
b_2	Specifies that at least one space is required but more than one is allowed.
XXXX	A four-digit (decimal) message identification number that may or may not contain leading zeros, and may or may not contain leading blanks. The count starts with 1 and ends with 9999.
XX	A two-digit number that may or may not contain a leading zero or a leading blank (01 or 1 is acceptable).
HH	Two hexadecimal digits representing the ASCII character.
(?)	Indicates that the specification contained within the parentheses is optional.
(+)	Indicates that several options are available,one of which must be chosen.
(#)	Indicates that the specification within the parentheses may be invoked a number of times.
NNN	3 digit numeric channel sequence number.
Line Pointer	Always points to the first character of the line of text. **NOTE** The line pointer is a memory indicator and is not visually displayed on the terminal.
Delimiter	Any ASCII character used as a space or separator. It cannot appear in the same character string for which it is a delimiter.
*	Used in a command to imply option.
Operand	One or more ASCII characters used in a command to amplify instructions.

Table J-2. ERROR MESSAGE LIST

Message Number	Message
*(1)	MESSAGE NEVER PRINTED
(2)	MESSAGE NOT FOUND
(3)	MEMORY FILLED
(4)	PHRASE NOT FOUND
(5)	DELIMITER/PHRASE IN ERROR
(6)	LINE TOO LONG
(7)	MESSAGE EMPTY
(8)	EXCESS LINES
(9)	EXCESS TABS
(10)	INVALID OR MISSING OPERAND
*(11)	XMITTER BUSY
(12)	NO SUCH COMMAND
(13)	COMMAND NOT VALID
*(14)	DEGRADED OPERATION
*(15)	IMPROPER SWITCH SETTINGS
(16)	MESSAGE NOT XMITTED
*(17)	PRINTING ABORTED
*(18)	MESSAGE XXXX REMOVED
*(19)	MESSAGE BEING TRANSMITTED
(20)	NO TABS SET
(21)	IMPROPER HEADER FORMAT
(22)	LINE TOO LONG, INPUT IGNORED

*Printed out as messages

Table J-3. SHORTEST ACCEPTABLE FORMS FOR SYSTEM COMMANDS AND SUBCOMMANDS

SYSTEM COMMANDS		PARAMETER SUBCOMMANDS		EDIT SUBCOMMANDS	
Command	Shortest Acceptable Form	Subcommand	Shortest Acceptable Form	Subcommand	Shortest Acceptable Form
PARAMETER	PAR	LINE	LIN	TOP	TO
EDIT	ED	SETAB	SE	BOTTOM	BO
PRINT	PR	CLRTAB	CL	UP	U
TRANSMIT	TR	DISPLAY	DI	DOWN	DO
REMOVE	REM	CAPIT	CA	BEFORE	BE
JUSTIFY	J	REMIND	REMI	INSERT	I
QUERY	Q	EOL	EO	DELETE	DE
STATUS	ST	LF	LF	FIND	F
TTY	TT	SPACE	SP	LIST	LIS
		PAPER	PAPER	REPLACE	REP
		GO	GO	HEADER	H
		TENVELOPE	TENV	APPEND	AP
		RENVELOPE	RENV	EXIT	EX
		EXIT	EX		

INDEX

SUBJECT PAGE

A

Abbreviations
Use in Manual 1-2
System J-1, 2-59
ASCII E-1

B

Battery Backup
Handling and Precautions. 3-26
Preconditioning 3-25
Baud (Character Rates) 2-17

C

Cables
Battery Backup 2-44
Ground 2-45
Power 2-44
Signal 2-45
Commands, System 2-71
Copyholder, Installation 2-45

D

Dustcover Controls..... 2-1

E

Environment Requirements..... 1-8
Error Messages..... ....J-2,2-61

F

FilterAssembly..... 1-6
Fuses 2-13
Replacement 3-28

G

Glossary 1-3

H

HeaderSubcommand H-12
Hexadecimal -ASCll Conversion Table G-6

INDEX - Continued

I

SUBJECT PAGE

Indicator Lamps
Replacement 3-23
Interface Assembly 3-28

K

Keyboard
Characteristics 2-20
Keys 2-20

M

Maintenance, Preventive 2-39
Message Memory 2-69
Modes of Operation
Full Duplex 1-7
Half Duplex 1-7

N

Nonoperational Conditions 2-31

O

Operating Procedures 2-47
Operation
As IntelligentTerminal 2-56
In Extreme Cold 2-87
In Extreme Heat 2-86
Operational States 2-29
Operational Tests with Distant Station 2-84
Operator Maintenance Procedures 3-6

P

Paper, Replacement 3-7
Paper-Low indications
Indicator lamp 3-7
Red Strip 3-7

INDEX - Continued

SUBJECT PAGE

Parity 2-4
PLAINDRESS Message(example) H-19
Preventive Maintenance Checks and Services 2-39
Printer Assembly
Characteristics 1-8

R

Ribbon
Installation 3-18
Replacement 3-21

s

Securing for Movement 2-90
Self-Test 2-33
Shortest Acceptable Forms... . . . . J-3

Shutdown Procedures 2-90
Size
Bare Unit 1-8
Starting Procedure 2-44
Subcommands
Parameter 2-75
Edit 2-77
System Compatibility 1-7
System Power Requirement.. 1-10
Operation at Reduced Power.. 2-88
System Application 1-7
Summary Lists
Terminal Operation in the ICT State I-2
Terminal Operation in the KSR State I-11

T

Technical Characteristics 1-8
Transfer Switch 2-3
Troubleshooting:
Operator 3-2

w

Weight 1-8

By Order of the Secretary of the Army:

JOHN A. WICKHAM JR.
General, United States Army
Chief of Staff

Official:

ROBERT M. JOYCE
Major General, United States Army
The Adjutant General

Distribution:

To be distributed in accordance with special list.

☆U.S. GOVERNMENT PRINTING OFFICE : 1993 0 - 342-421 (63109)

RECOMMENDED CHANGES TO EQUIPMENT TECHNICAL PUBLICATIONS

THEN JOT DOWN THE DOPE ABOUT IT ON THIS FORM. CAREFULLY TEAR IT OUT, FOLD IT AND DROP IT IN THE MAIL!

SOMETHING WRONG WITH THIS PUBLICATION?

FROM (PRINT YOUR UNIT'S COMPLETE ADDRESS)
Commander
Stateside Army Depot
ATTN: AMSTA-US
Stateside, N.J. 07703

DATE SENT
10 July 1975

PUBLICATION NUMBER	PUBLICATION DATE	PUBLICATION TITLE
TM 11-5840-340-12	23 Jan 74	Radar Set AN/PRC-76

BE EXACT PIN-POINT WHERE IT IS

PAGE NO	PARAGRAPH	FIGURE NO	TABLE NO	IN THIS SPACE TELL WHAT IS WRONG AND WHAT SHOULD BE DONE ABOUT IT:
2-25	2-28			Recommend that the installatior antenna alignment procedure be changed throughout to specify a 2° IFF antenna lag rather than 1° REASON: Experience has shown that with only a 1° lag, the antenna servo system is too sensitive to wind gusting in excess of 25 knots, and has a tendency to rapidly accelerate and decelerate as it hunts, causing strain to the drive train. Hunting is minimized by adjusting the lag to 2° without degradation of operation.
3-10	3-3		3-1	Item 5, Function column. Change "2 db" to "3 db." REASON: The adjustment procedure the the TRANS POWER FAULT indicator calls for a 3 db (500 watts) adjustment to light the TRANS POWER FAULT indicator.
5-6	5-8			Add new step f.1 to read, "Replace cover plate removed in step e.1, above." REASON: To replace the cover plate.
		FO3		Zone C 3. On J1-2, change "+24 VDC to "+5 VDC." REASON: This is the output line of the 5 VDC power supply. +24 VDC is the input voltage.

PRINTED NAME GRADE OR TITLE AND TELEPHONE NUMBER
SSG I. M. DeSpiritof 999-1776

SIGN HERE
SSG I. M. DeSpiritof

DA FORM 1 JUL 79 2028-2 PREVIOUS EDITIONS ARE OBSOLETE

PS--IF YOUR OUTFIT WANTS TO KNOW ABOUT YOUR RECOMMENDATION MAKE A CARBON COPY OF THIS AND GIVE IT TO YOUR HEADQUARTERS

SAMPLE

RECOMMENDED CHANGES TO EQUIPMENT TECHNICAL PUBLICATIONS

SOMETHING WRONG WITH THIS PUBLICATION?

THEN...JOT DOWN THE DOPE ABOUT IT ON THIS FORM. CAREFULLY TEAR IT OUT, FOLD IT AND DROP IT IN THE MAIL.

FROM: (PRINT YOUR UNIT'S COMPLETE ADDRESS)

DATE SENT

PUBLICATION NUMBER	PUBLICATION DATE	PUBLICATION TITLE
TM 11-5815-602-10	23 Sep 1983	Terminal, Communications AN/UGC-74A(V)3

BE EXACT PIN-POINT WHERE IT IS

PAGE NO.	PARA-GRAPH	FIGURE NO.	TABLE NO.

IN THIS SPACE TELL WHAT IS WRONG AND WHAT SHOULD BE DONE ABOUT IT:

PRINTED NAME GRADE OR TITLE AND TELEPHONE NUMBER

SIGN HERE

DA FORM 1 JUL 79 2028-2

PREVIOUS EDITIONS ARE OBSOLETE

P.S.--IF YOUR OUTFIT WANTS TO KNOW ABOUT YOUR RECOMMENDATION MAKE A CARBON COPY OF THIS AND GIVE IT TO YOUR HEADQUARTERS.

TEAR ALONG PERFORATED LINE

FILL IN YOUR UNIT'S ADDRESS

FOLD BACK

DEPARTMENT OF THE ARMY

OFFICIAL BUSINESS

Commander
US Army Communications-Electronics
Command and Fort Monmouth
ATTN: DRSEL-ME-MP
Fort Monmouth, New Jersey 07703

TEAR ALONG DOTTED LINE

FOLD BACK

REVERSE OF DA FORM 2028-2

THE METRIC SYSTEM AND EQUIVALENTS

'NEAR MEASURE

. Centimeter = 10 Millimeters = 0.01 Meters = 0.3937 Inches
1 Meter = 100 Centimeters = 1000 Millimeters = 39.37 Inches
1 Kilometer = 1000 Meters = 0.621 Miles

'VEIGHTS

Gram = 0.001 Kilograms = 1000 Milligrams = 0.035 Ounces
1 Kilogram = 1000 Grams = 2.2 lb.
1 Metric Ton = 1000 Kilograms = 1 Megagram = 1.1 Short Tons

LIQUID MEASURE

1 Milliliter = 0.001 Liters = 0.0338 Fluid Ounces
1 Liter = 1000 Milliliters = 33.82 Fluid Ounces

SQUARE MEASURE

1 Sq. Centimeter = 100 Sq. Millimeters = 0.155 Sq. Inches
1 Sq. Meter = 10,000 Sq. Centimeters = 10.76 Sq. Feet
1 Sq. Kilometer = 1,000,000 Sq. Meters = 0.386 Sq. Miles

CUBIC MEASURE

1 Cu. Centimeter = 1000 Cu. Millimeters = 0.06 Cu. Inches
1 Cu. Meter = 1,000,000 Cu. Centimeters = 35.31 Cu. Feet

TEMPERATURE

5/9(°F - 32) = °C
212° Fahrenheit is evuivalent to 100° Celsius
90° Fahrenheit is equivalent to 32.2° Celsius
32° Fahrenheit is equivalent to 0° Celsius
9/5C° + 32 =°F

APPROXIMATE CONVERSION FACTORS

TO CHANGE	TO	MULTIPLY BY
Inches	Centimeters	2.540
Feet	Meters	0.305
Yards	Meters	0.914
Miles	Kilometers	1.609
Square Inches	Square Centimeters	6.451
Square Feet	Square Meters	0.093
Square Yards	Square Meters	0.836
Square Miles	Square Kilometers	2.590
Acres	Square Hectometers	0.405
Cubic Feet	Cubic Meters	0.028
Cubic Yards	Cubic Meters	0.765
Fluid Ounces	Milliliters	29.573
ıts	Liters	0.473
arts	Liters	0.946
allons	Liters	3.785
Ounces	Grams	28.349
Pounds	Kilograms	0.454
Short Tons	Metric Tons	0.907
Pound-Feet	Newton-Meters	1.356
Pounds per Square Inch	Kilopascals	6.895
Miles per Gallon	Kilometers per Liter	0.425
Miles per Hour	Kilometers per Hour	1.609

TO CHANGE	TO	MULTIPLY BY
Centimeters	Inches	0.394
Meters	Feet	3.280
Meters	Yards	1.094
Kilometers	Miles	0.621
Square Centimeters	Square Inches	0.155
Square Meters	Square Feet	10.764
Square Meters	Square Yards	1.196
Square Kilometers	Square Miles	0.386
Square Hectometers	Acres	2.471
Cubic Meters	Cubic Feet	35.315
Cubic Meters	Cubic Yards	1.308
Milliliters	Fluid Ounces	0.034
Liters	Pints	2.113
Liters	Quarts	1.057
'ers	Gallons	0.264
.ms	Ounces	0.035
.ograms	Pounds	2.205
Metric Tons	Short Tons	1.102
Newton-Meters	Pounds-Feet	0.738
Kilopascals	Pounds per Square Inch	0.145
'lometers per Liter	Miles per Gallon	2.354
›meters per Hour	Miles per Hour	0.621

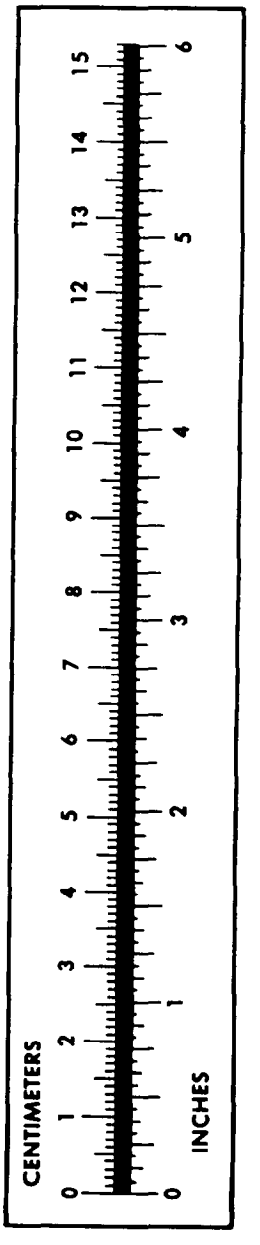

PIN: 054113-000